Service
Service
Service

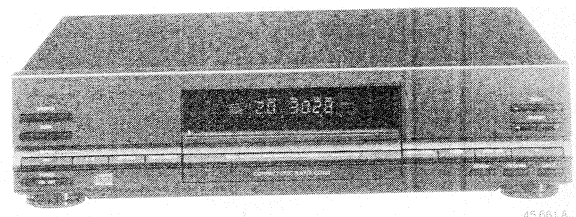

Service Manual

TABLE OF CONTENTS PAGE

1.	Technical specifications	1
2.	Controls and connections	2
3.	Warnings	3
4.	Dismantling instructions	4
5.	Servicing hints	5
6.	Block diagram	8
7.	Wiring diagram	9
8.	Circuit diagrams and printed boards	
8.1.	Power supply	9
8.2.	Photo diode signal controller	10
8.3.	Servo control circuit	11
8.4.	Servo control and decoder panel component side	12
8.5.	Servo control and decoder panel solder side	13
8.6.	Decoder circuit	14
8.7.	Display and keyboard	15
9.	Service testprogram	15
10.	Faultfinding guide	16
11.	Start up procedure	16
12.	Electrical adjustments	17
13.	Exploded view	18
14.	Mechanical partslist	18
15.	Electrical partslist	19

Published by Consumer Electronics Printed in The Netherlands ©Copyright reserved Subject to modification

4822 725 23267

PHILIPS

CS 35 751

TECHNICAL SPECIFICATIONS

General

1.	Mains voltage /00G	: 220V (±10%)
	/05G	: 240V (±10%)
2.	Mains frequency	: 50Hz
3.	Mains voltage selection	: No
4.	Power consumption mains, operated	: 8W

Line output

1.	Number of channels	: 2
2.	Output voltage	: 2 Vrms ± 2 dB
3.	Unbalance left right	: max ± 0,5 dB
4.	Output resistance	: 1 kOhm
5.	Amplitude linearity	: max ± 0,2 dB from 20 Hz to 18 kHz
6.	Phase non-linearity	: max ± 1° from 20 Hz to 18 kHz
7.	Signal to noise ratio	: min 90 dB from 20 Hz to 18 kHz
8.	Dynamic range	: min 80 dB from 20 Hz to 18 kHz
9.	Total harmonic distortion + noise	: min 66 dB from 20 Hz to 18 kHz
		: min 70 dB at 1 kHz
10.	Intermodulation distortion	: min 70 db from 20 Hz to 18 kHz
11.	Out-band attenuation	: min 50 dB above 24,8 kHz
12.	Channel separation	: min 80 dB from 20 Hz to 18 kHz
		: min 85 dB at 1kHz
13.	Muting during random access	: min 90 dB from 20 Hz to 18 kHz
14.	Automatic switched de-emphasis (simple) with time constant	: 15/50 µs

Dimensions and weight

1.	Apparatus tray closed	: WxDxH 360 x 300 x 88 mm
2.	Apparatus tray open	: WxDxH 360 x 447 x 88 mm
3.	Weight	: 2,860 kg

Optical read-out system

1.	Laser type	: Semiconductor AlGaAs
2.	Wavelength	: 780 nm ± 20 nm
3.	Light output (c.w.)	: 0,4 mW ± 0,04 mW

CONTROLS AND CONNECTIONS

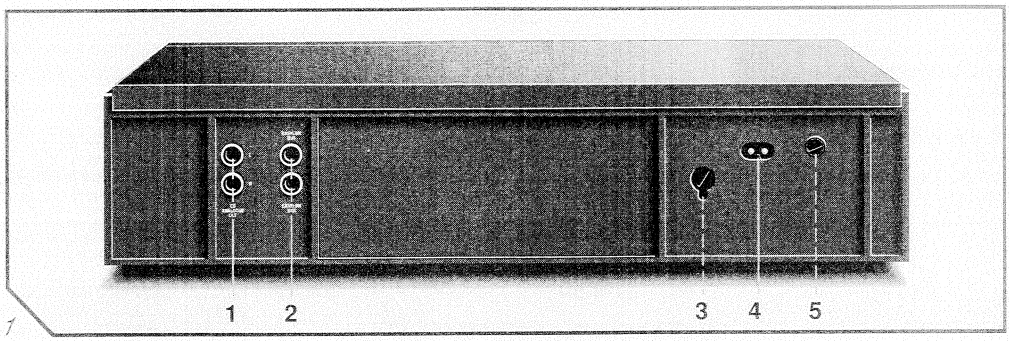

1

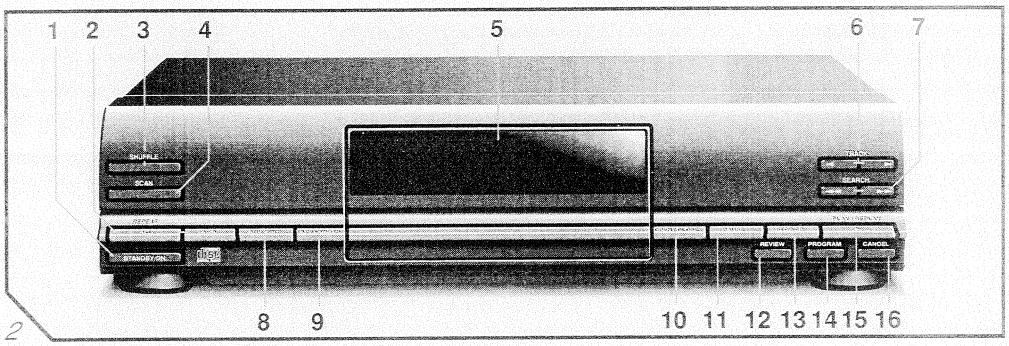

2

CONTROLS AND CONNECTIONS

Indication on App.	Indication in diagram
1. STAND BY/ON	SK-1
2. REPEAT ALL	1986
A-B	1981
3. SHUFFLE	1982
4. SCAN	1984
5. DISPLAY	1989
6. < TRACK >	1972 1970
7. << SEARCH >>	1978 1975
8. ADV EDIT	1983
9. TAPE LENGTH	1985
10. OPEN/CLOSE	1980
11. PAUSE	1977
12. REVIEW	1971
13. STOP/CP	1976
14. PROGRAM	1974
15. PLAY/REPLAY	1979
16. CANCEL	1973

CONNECTIONS

Indication on App.	Indication in diagram
1. CD ANALOGUE OUT	BU-2
2. EASY LINK BUS	BU-2
3. Voltage selector (not all versions)	1077
4. Mains socket	BU-1
5. Mains fuse holder (not all versions)	15

ESD

(GB) WARNING

All ICs and many other semi-conductors are susceptible to electrostatic discharges (ESD).
Careless handling during repair can reduce life drastically.
When repairing, make sure that you are connected with the same potential as the mass of the set via a wrist wrap with resistance.
Keep components and tools also at this potential.

(NL) WAARSCHUWING

Alle IC's en vele andere halfgeleiders zijn gevoelig voor electrostatische ontladingen (ESD).
Onzorgvuldig behandelen tijdens reparatie kan de levensduur drastisch doen verminderen.
Zorg ervoor dat u tijdens reparatie via een polsband met weerstand verbonden bent met hetzelfde potentiaal als de massa van het apparaat.
Houd componenten en hulpmiddelen ook op ditzelfde potentiaal.

(F) ATTENTION

Tous les IC et beaucoup d'autres semi-conducteurs sont sensibles aux décharges statiques (ESD).
Leur longévité pourrait être considérablement écourtée par le fait qu'aucune précaution n'est prise à leur manipulation.
Lors de réparations, s'assurer de bien être relié au même potentiel que la masse de l'appareil et enfiler le bracelet serti d'une résistance de sécurité.
Veiller à ce que les composants ainsi que les outils que l'on utilise soient également à ce potentiel.

(D) WARNUNG

Alle ICs und viele andere Halbleiter sind empfindlich gegen elektrostatische Entladungen (ESD).
Unsorgfältige Behandlung bei der Reparatur kann die Lebensdauer drastisch vermindern.
Sorgen sie dafür, dass Sie im Reparaturfall über ein Pulsarmband mit Widerstand mit dem Massepotential des Gerätes verbunden sind.
halten Sie Bauteile und Hilfsmittel ebenfalls auf diesem Potential.

(I) AVVERTIMENTO

Tutti IC e parecchi semi-conduttori sono sensibili alle scariche statiche (ESD).
La loro longevità potrebbe essere fortemente ridatta in caso di non osservazione della più grande cauzione alla loro manipolazione.
Durante le riparazioni occorre quindi essere collegato allo stesso potenziale che quello della massa dell'apparecchio tramite un braccialetto a resistenza.
Assicurarsi che i componenti e anche gli utensili con quali si lavora siano anche a questo potenziale.

(GB)
Safety regulations require that the set be restored to its original condition and that parts which are identical with those specified be used.

(NL)
Veiligheidsbepalingen vereisen, dat het apparaat in zijn oorspronkelijke toestand wordt teruggebracht en dat onderdelen, identiek aan de gespecificeerde worden toegepast.

(SF) Varo!

Avattaessa ja suojalukitus ohitettaessa olet alttiina näkymättömälle lasersäteilylle. Älä katso säteeseen.

(D)
Bei jeder Reparatur sind die geltenden Sicherheitsvorschriften zu beachten. Der Originalzustand des Geräts darf nicht verändert werden für Reparaturen sind Original-Ersatzteile zu verwenden.

(I)
Le norme di sicurezza esigono che l'apparecchio venga rimesso nelle condizioni originali e che siano utilizzati pezzi di ricambiago identici a quelli specificati.

(S) Varning!

Osynlig laserstrålning när denna del är öppnad och spärren är urkopplad. Betrakta ej strålen.

(F)
Les normes de sécurité exigent que l'appareil soit remis à l'état d'origine et que soient utilisées les pièces de rechange identiques à celles spécifiées.

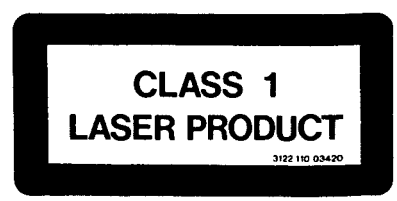

DISMANTLING INSTRUCTIONS

DEMOUNTING MAIN PANEL

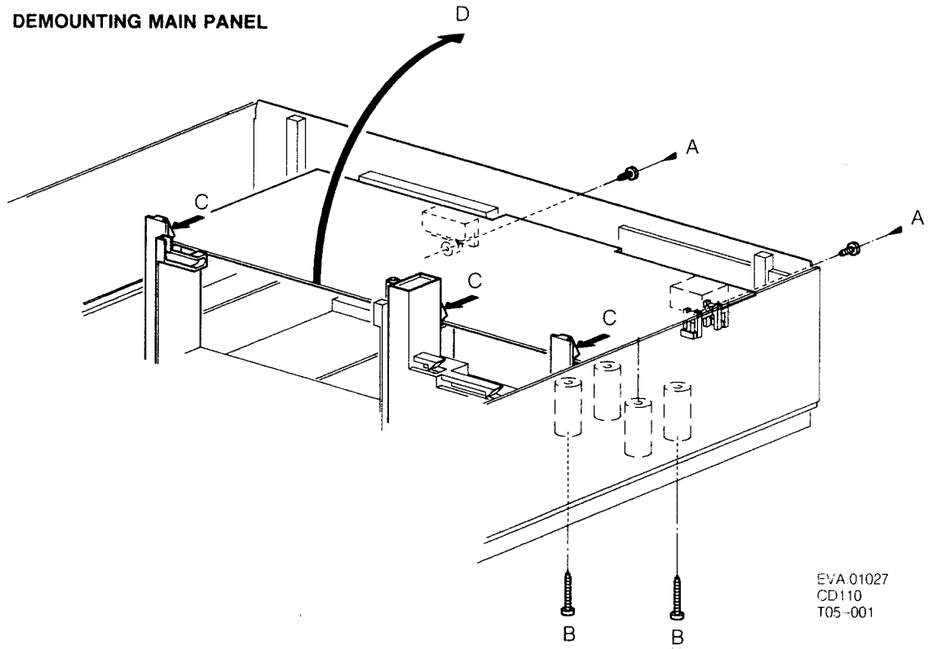

SERVICE POSITION MAIN PANEL

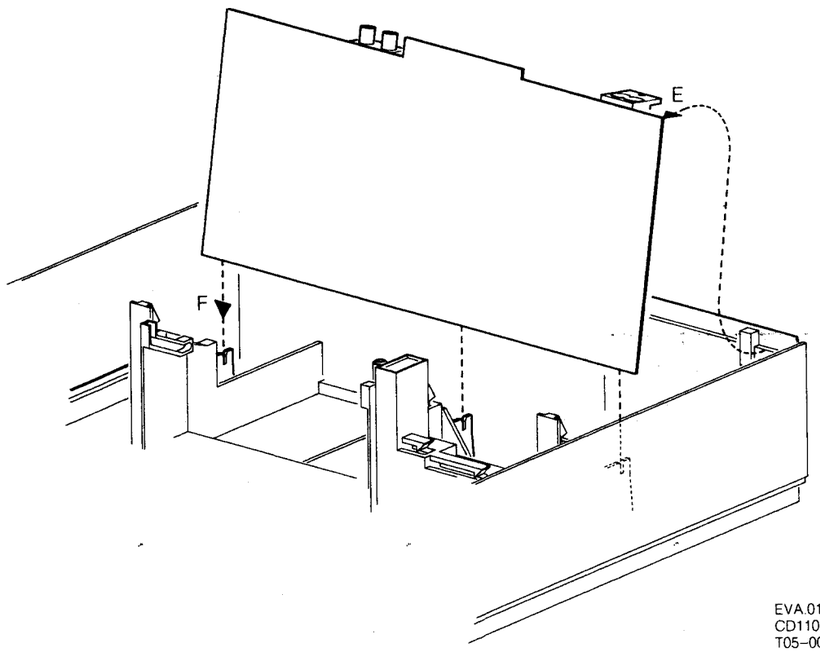

DEMOUNTING LOADING

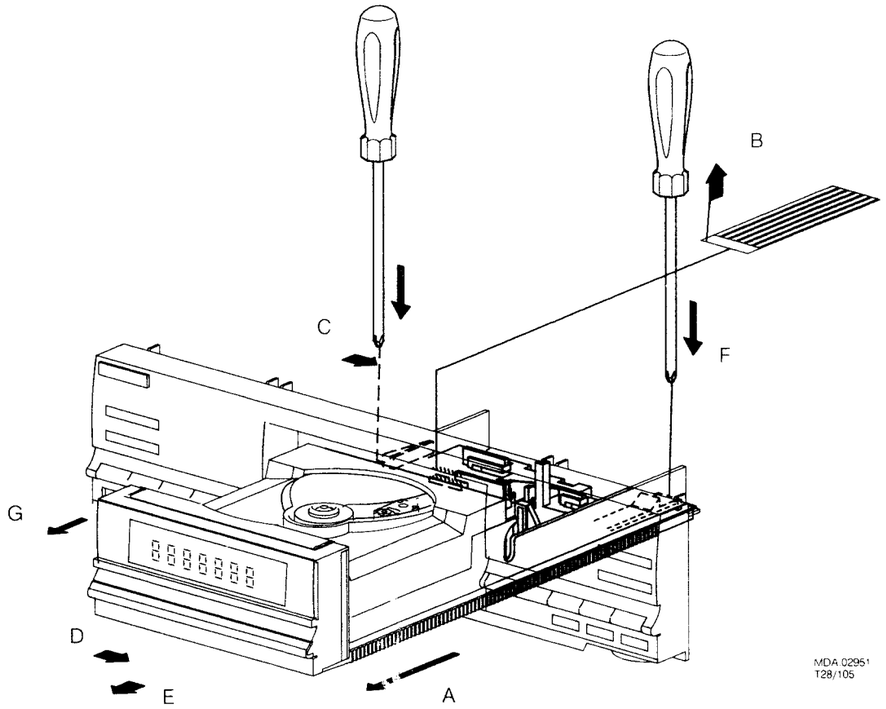

HAS.CD320.DEM-TRAY

DEMONTING TRAY FRONT

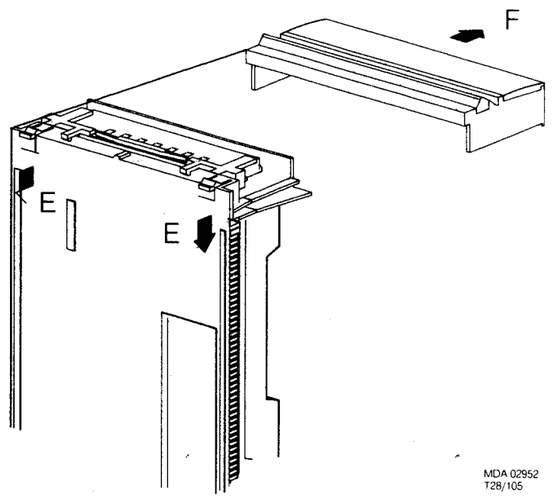

HAS.CD320.DEM-TRAYFRONT

DEMOUNTING CDM

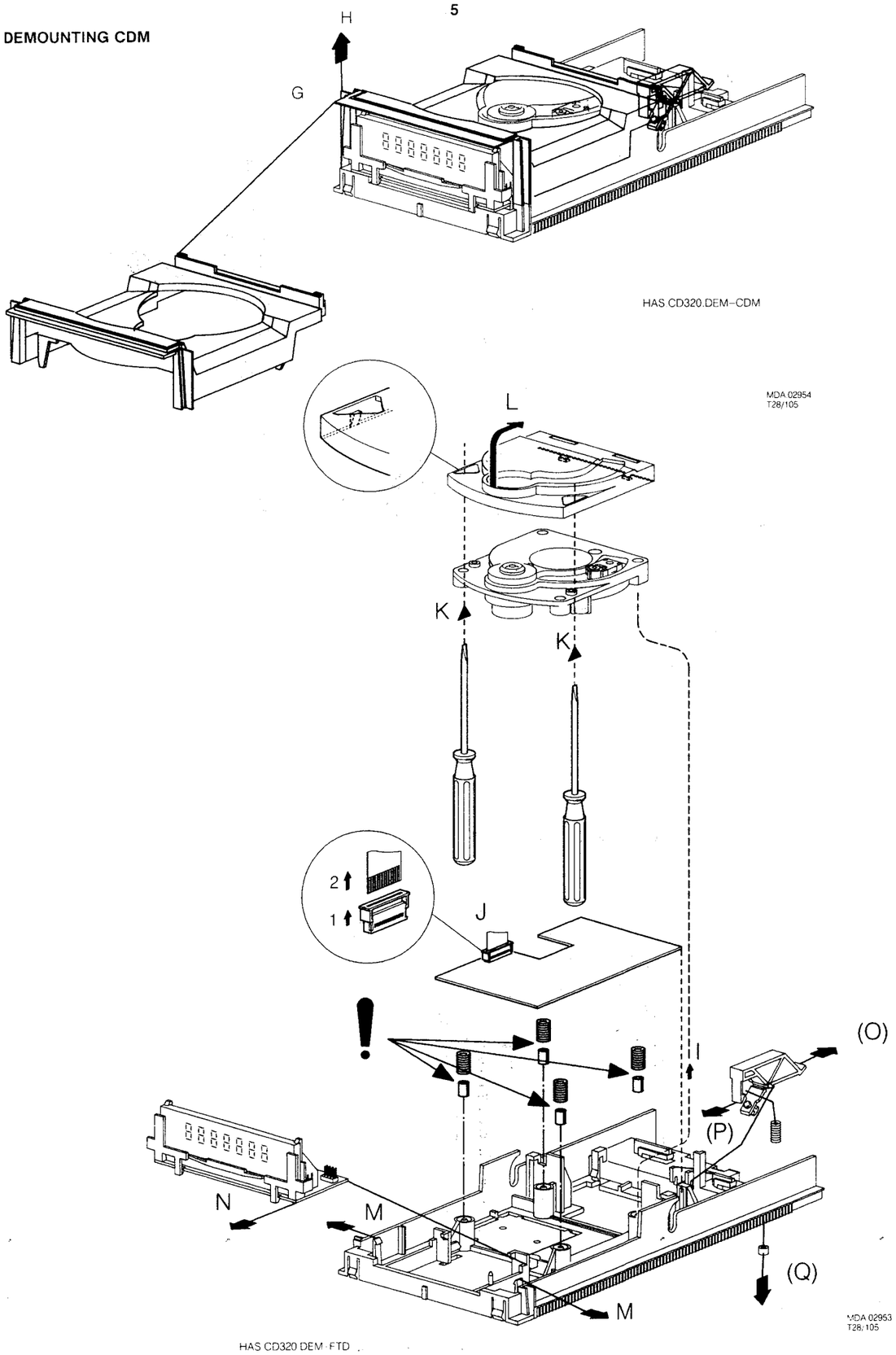

SERVICING HINTS

When the tray mechanism and CDM-unit has been disassembled the player can be prepared for measurements by bridging or activating the "laser safety switch" SK3 on the photo diode signal controller panel.

Service disc hold-down

The disc should always rest properly on the turntable. To achieve this a disc hold-down has been mounted in a bracket of the tray mechanism.
If the tray mechanism has to be disassembled for servicing, a separate disc hold-down should be used. For a service disc hold-down see the figure below.
Compose a service Disc hold-down in the following way.

- Cut in the most inner ring of a disc holddown (4822 462 50383) with small and sharp nippers See fig. below.
- Enlarge the diameter of the innermost ring slightly with the hind part of a pencil or ballpoint, so that it jams onto the turntable with sufficient force.
- If the jamming force decreases after certain time of use, the diameter has to be enlarged with a pencil or ballpoint again.

SERVICE TOOLS

Audio signal disc	4822 397 30184
Disc without errors (test disc 5) + disc with DO errors, black spots and fingerprints (test disc 5A	4822 397 30096
Disc (65 min 1kHz)without pause	4822 397 30155
Max. diameter disc (58.0 mm)	4822 397 60141
Torx screwdrivers	
Set (straight)	4822 395 50145
Set (square)	4822 395 50132
13th order filter	4822 395 30204
Service cable (4p)	4822 321 21284
Service flexfoil (14p)	4822 322 40066
Service connector (14p)	4822 267 50676
Green LED CQY G11	5322 130 32182
Infra red remote control e.g.	4822 218 10349

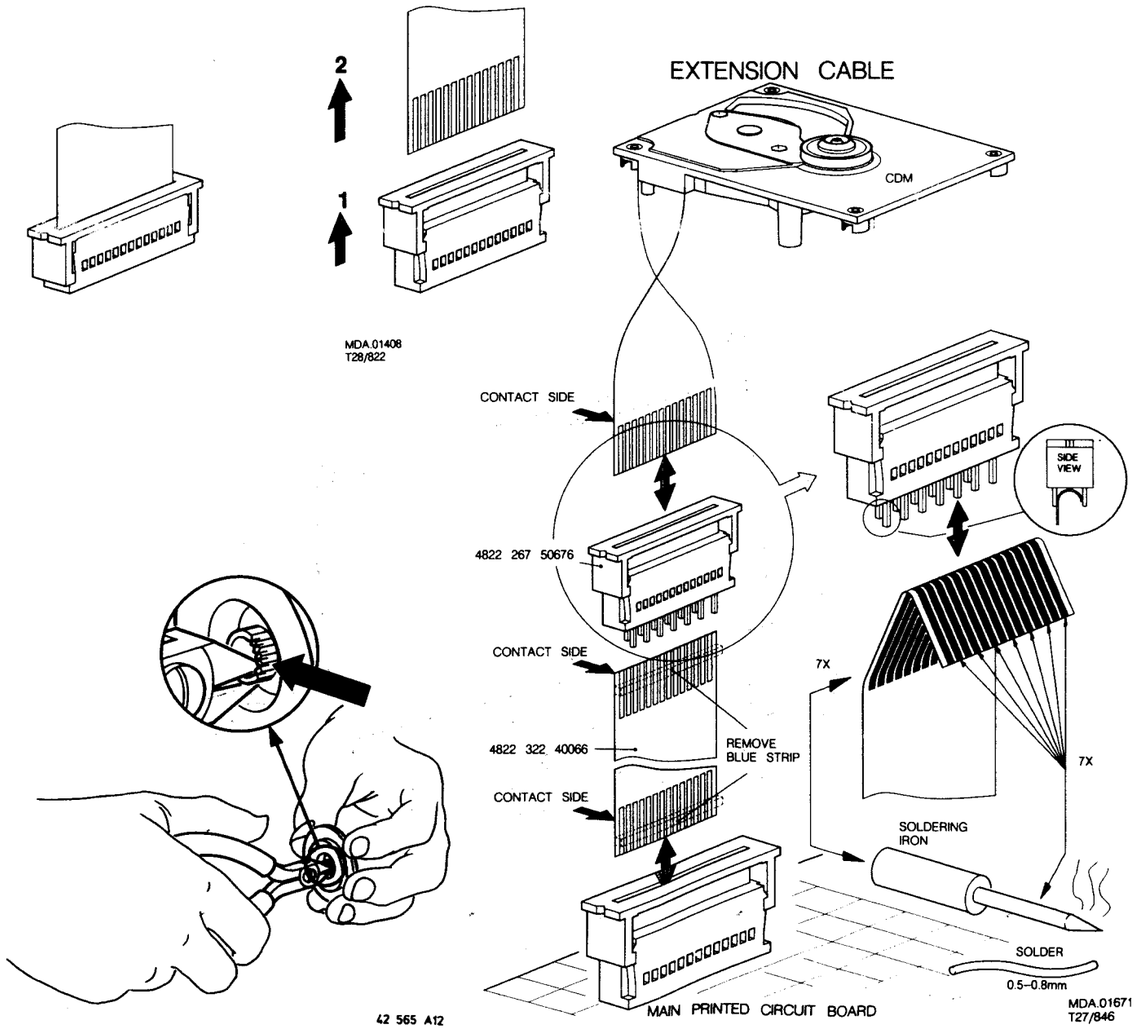

SERVICING HINTS

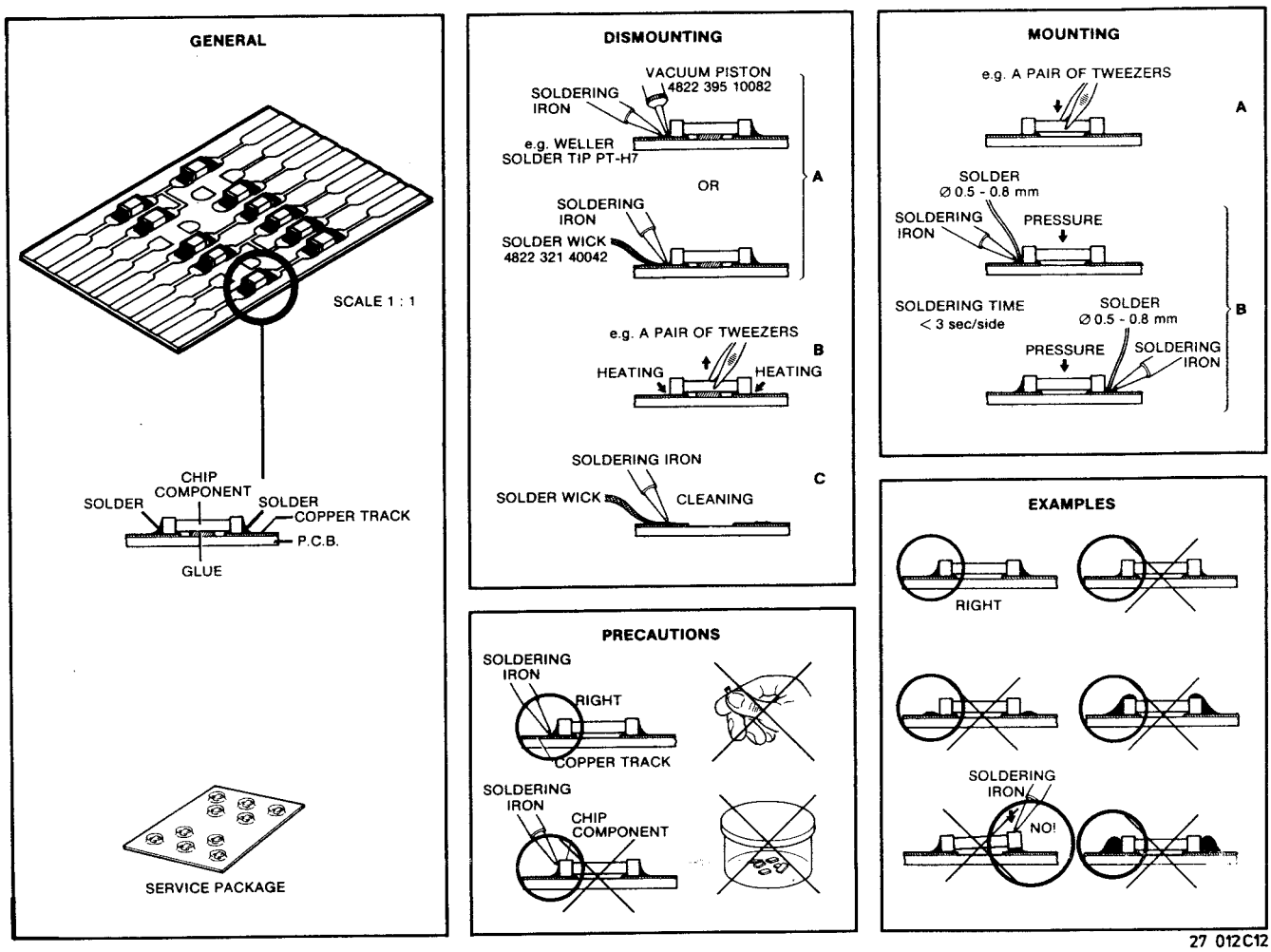

27 012C12

ACLR	–	µP interface register clear input
AGC	–	Automatic Gain Control
AOL-R	–	Analoque output left-right
B0-B3	–	Control bits for radial circuit
BCK	–	Bit clock input
BEQ	–	Equalizer reference current input
BGC	–	DC and LF gain control reference input
BPA-C	–	Display backplane A-C
C16M1	–	1/2 divider input
CAS	–	Column address strobe signal output
Cosc1	–	Capacitor wobble oscillator
Cosc2	–	Capacitor wobble oscillator
CS	–	Chip select
D1-D4	–	Photodiode currents
DASEL1-4	–	DAC interface format select
DATA	–	Data input
DEC	–	Decoupling input internal bypass
DET	–	HF detector voltage input
DI	–	Serial data input
DISBL	–	Display blank
DISENA-B	–	Disenable A-B
DISCLK	–	Display clock
DISDAT	–	Display data
DIV4	–	Divide by 4 input
DLRCK	–	Left/right channel clock
DO1	–	Dual DAC Rch serial data output
DOBSEL	–	Data bit select
DODS	–	Drop out detector suppression
DRD	–	8/12 cm Disc detection
DSCK	–	Data shift clock to DAC
EFFK	–	EFM frame clock output
EMP	–	Emphasis flag output
EST2	–	Error status 2
FE	–	Focus error signal
FE lag	–	Focus error signal for LAG network
FS	–	Focus starting current
GCHF	–	Gain control input of HF amplifier
GCLF	–	Gain control input for AC and LF amplifiers
HF	–	HF output for DEMOD
HFD	–	HF detector output for DEMOD
HF-out	–	HF amplifier and equalizer voltage output
IREF	–	Current reference
KBSCO-5	–	Keyboard scanning 0-5
LM	–	Laser monitor diode input
LO	–	Laser amplifier current output
LPF	–	PLL loop filter
MCK	–	µP interface shift clock input
MLA	–	µP interface data latch clock input
MSD	–	µP interface serial data input
PLLH	–	PLL on hold output
PWM	–	Disk motor driving output
RADO-7	–	Address output
RAD	–	Radial drive input
RADout	–	output of RE2-RE1 input
RAS	–	Row address strobe signal output
RDB1-4	–	Data input/output
RE	–	Radial error signal (Amplified RE_2-RE_1 currents)
RE1	–	Radial error signal 1 (summation of amplified currents D_3 and D_4
RE2	–	Radial error signal 2 (summation of amplified currents D_1 and D_2
RE dig	–	Radial error digital
REin	–	Radial error input
RE lag	–	Radial error signal for LAG network
Rosc	–	Resistor wobble oscillator
Rwob	–	Wobble generator input
SA1-SC4	–	12 multiplexed outputs
Sc	–	Starting up capacitor input
SCCK	–	Shift clock input for serial subcode data output
SCINT	–	Interrupt output of subcode Q
SCOE1	–	Enable input of subcode T
SIN	–	Tray switch
Si/RD	–	On/off control for laser supply and focus circuit. Ready signal, Starting up procedure succesfull.
SK	–	Serial clock input
SQRCK	–	Subcode Q register
SQRO	–	Subcode Q register output
TEST1	–	Test control input
TL	–	Track loss output signal
TLC	–	Output from slice level control
TTM	–	Control voltage for turntable motor
Vext+	–	Supply connection
Vext–	–	Supply connection
VLCD	–	Supply liquid crystal display
WE	–	Write enable output
WS	–	Word select input
XI	–	Crystal oscillator input
XO	–	Crystal oscillator output

8

BLOCKDIAGRAM

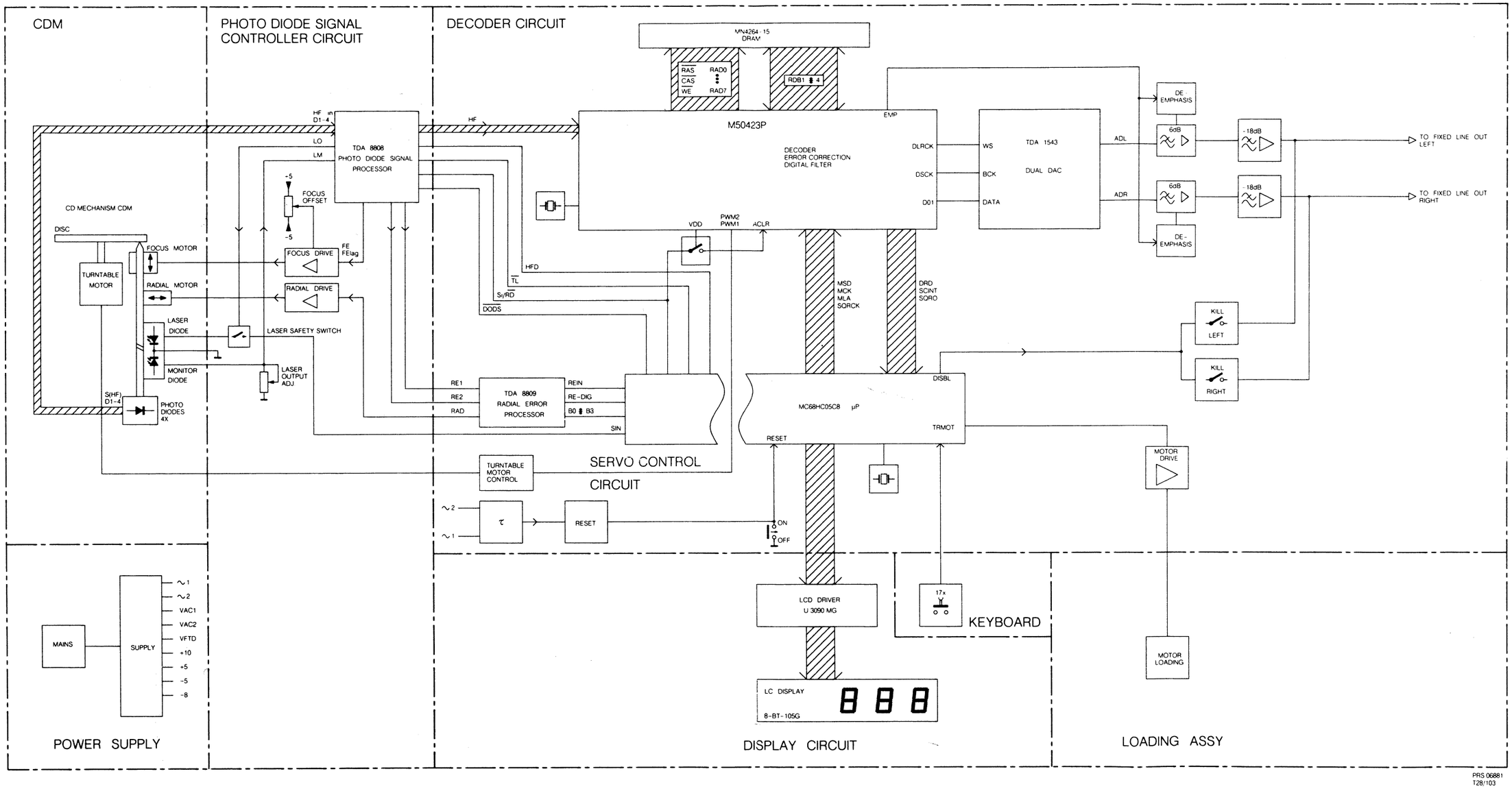

WIRING DIAGRAM

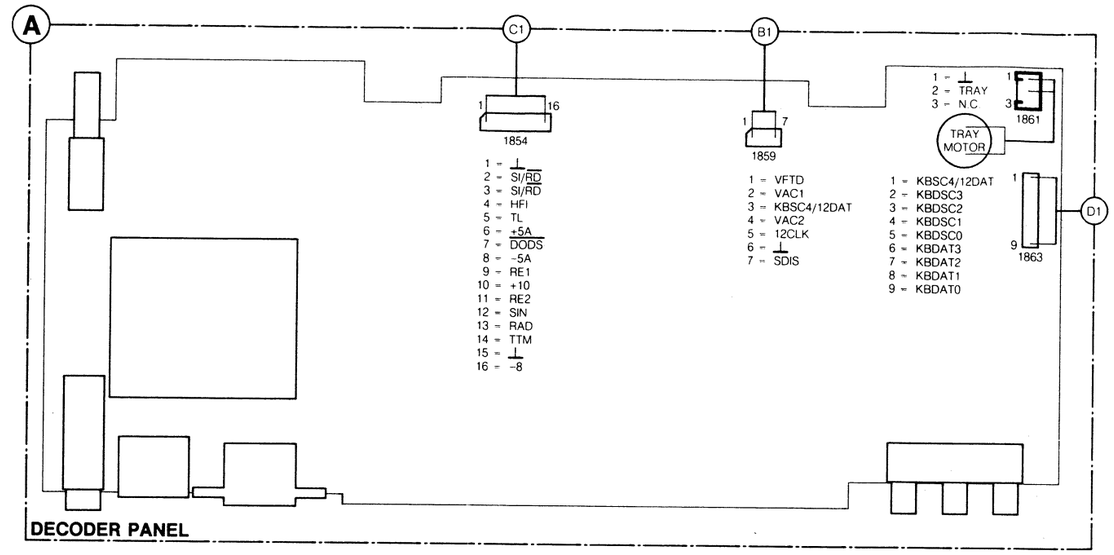

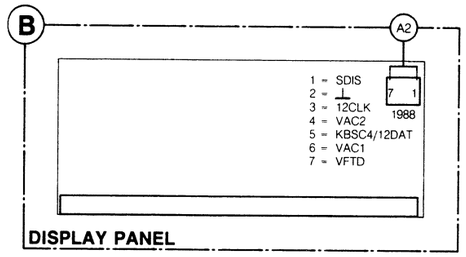

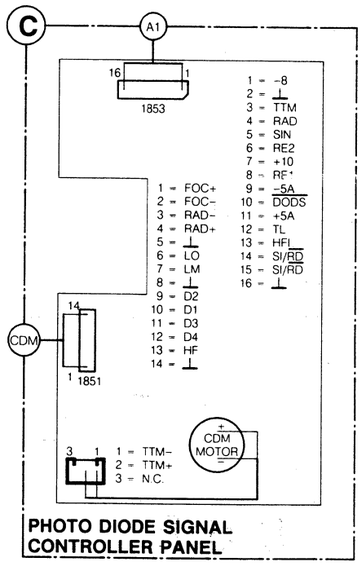

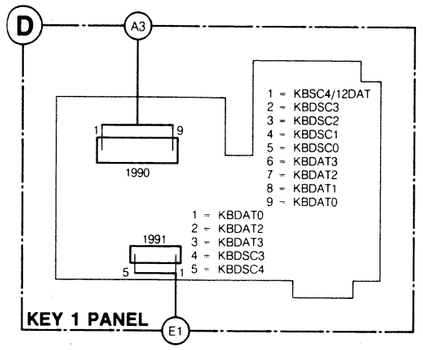

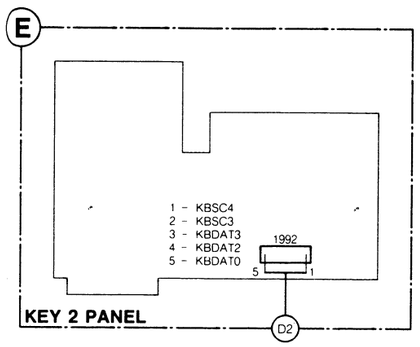

MDA.02944
T28/103

POWER SUPPLY

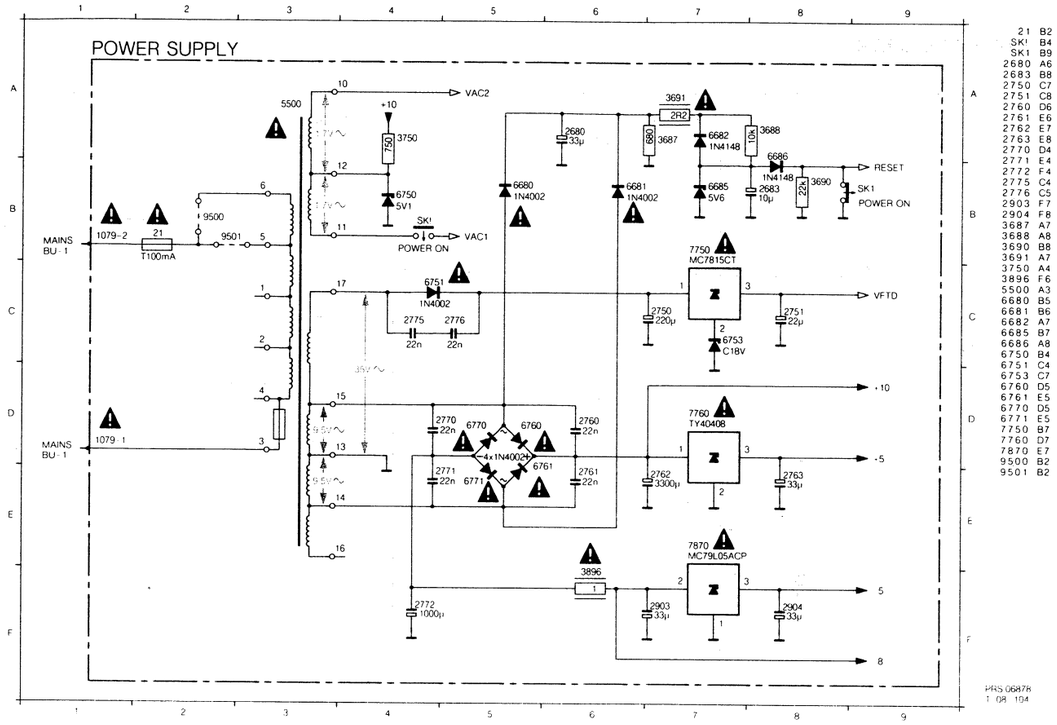

TRANSFORMER CONNECTIONS

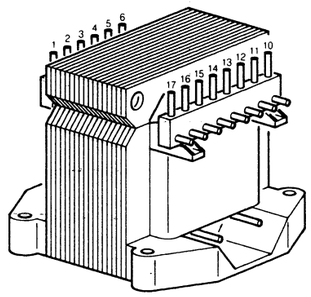

Vprim (v ∼)	WINDING	TRANSFORMER
110V / 60Hz	5 – 4	4822 146 30879
127V / 60Hz	6 – 4	4822 146 30879
220V / 50Hz	5 – 4	4822 146 30859
240V / 50Hz	6 – 4	4822 146 30859

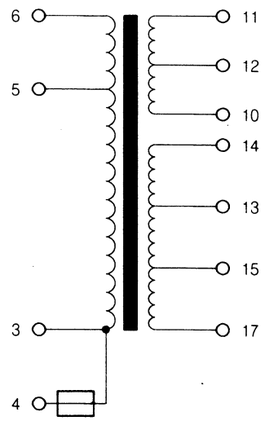

MDA.02603
T07-9012

PHOTO DIODE SIGNAL CONTROLLER

SK3 L3	2803 D4	2811 D8	2817 N6	2832 A10	3805 C9	3812 J3	3819 M9	3835 B8	3893 J4	6850 L3
1001 I1	2806 D5	2812 H9	2818 L7	2833 L8	3806 D8	3814 I3	3820 M8	3836 B9	4811 E9	7800 I6
1002 J1	2807 D6	2813 D7	2819 N9	2834 M8	3807 D5	3815 M7	3821 L9	3837 B10	4812 L7	7801 J3
1003 J1	2808 F9	2814 K2	2820 M9	3800 D3	3808 L6	3816 M7	3822 M9	3838 B8	4813 M7	7803 A8
2800 E2	2809 D9	2815 K3	2830 G10	3801 E3	3810 K3	3817 L7	3823 N8	3839 L8	6800 B9	7803 L8
2801 E3	2810 D6	2816 J3	2831 B9	3804 D7	3811 K3	3818 N9	3824 N7	3840 M8	6801 B9	

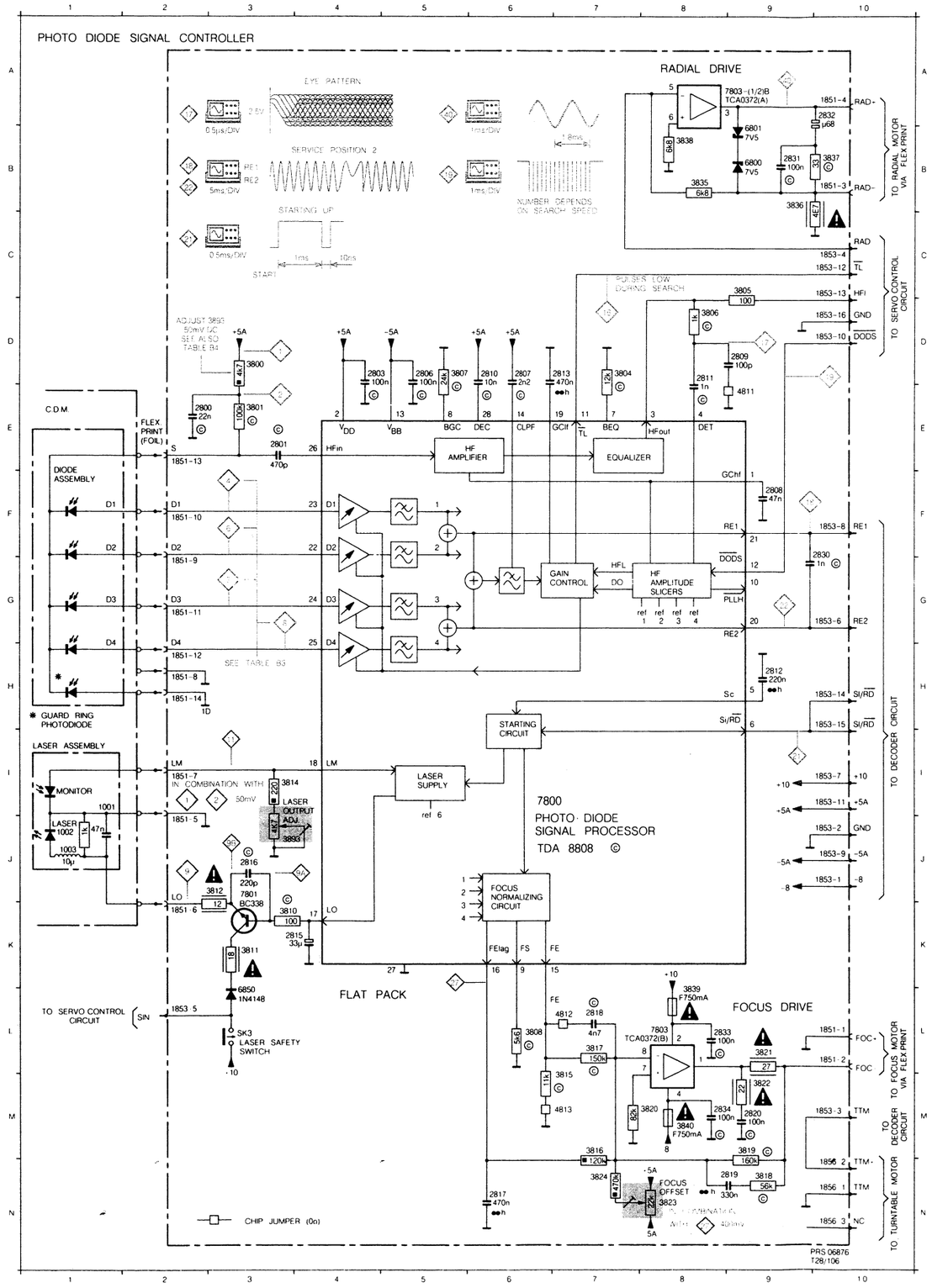

COMPONENT SIDE

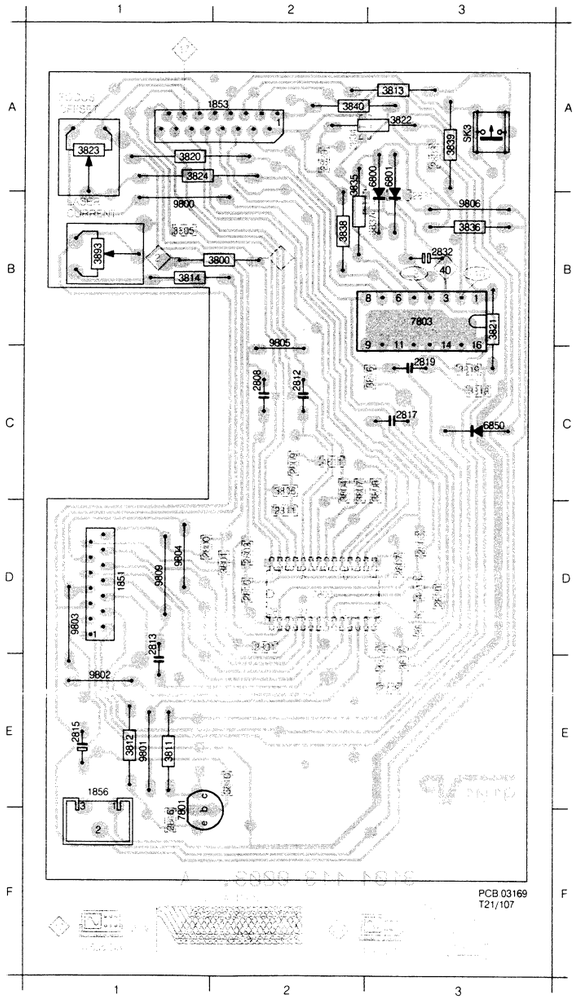

SK3 A3	2803 D2	2815 E1	3800 B1	3812 E1	3835 B2	4811 C2	6850 C3	9801 E1	9809 D1	
1851 D1	2806 D3	2816 F1	3801 D2	3813 A3	3836 B3	4812 E3	7800 D2	9802 E1		
1853 A1	2807 D3	2817 C3	3804 D2	3814 B1	3837 B3	4813 D3	7801 F1	9803 D1		
1856 E1	2808 C2	2818 E3	3805 B1	3815 D3	3838 B2	6800 A3	7803 B3	9804 D1		
2800 D1	2809 C2	2819 C3	3806 C2	3816 C3	3839 A3	6801 A3	9800 B1	9805 C2		
2801 D2	2810 D2	2820 A2	3807 D2	3817 E3	3840 A2	6850 C3	9801 E1	9806 B3		
2803 D2	2811 D2	2830 D3	3808 D3	3818 C3	3893 B1	7800 D2	9802 E1	9809 D1		
2806 D3	2812 C2	2831 B3	3810 E2	3819 C3	4811 C2	7801 F1	9803 D1			
2807 D3	2813 E1	2832 B3	3811 E1	3820 A1	4812 E3	7803 B3	9804 D1			
2808 C2	2815 E1	2833 A3	3812 E1	3821 B3	4813 D3	9800 B1	9805 C2			
2809 C2	2816 F1	2834 A2	3813 A3	3822 A3	6800 A3	9801 E1	9806 B3			
2810 D2	2817 C3	3800 B1	3814 B1	3823 A1	6801 A3	9802 E1	9809 D1			
2811 D2	2818 E3	3801 D2	3815 D3	3824 A1	6850 C3	9803 D1				
2812 C2	2819 C3	3804 D2	3816 C3	3835 B2	7800 D2	9804 D1				
2813 E1	2820 A2	3805 B1	3817 E3	3836 B3	7801 F1	9805 C2				
2815 E1	2830 D3	3806 C2	3818 C3	3837 B3	7803 B3	9806 B3				
2816 F1	2831 B3	3807 D2	3819 C3	3838 B2	9800 B1	9809 D1				
2817 C3	2832 B3	3808 D3	3820 A1	3839 A3	9801 E1					
2818 E3	2833 A3	3810 E2	3821 B3	3840 A2	9802 E1					
2819 C3	2834 A2	3811 E1	3822 A3	3893 B1	9803 D1					

SOLDER SIDE

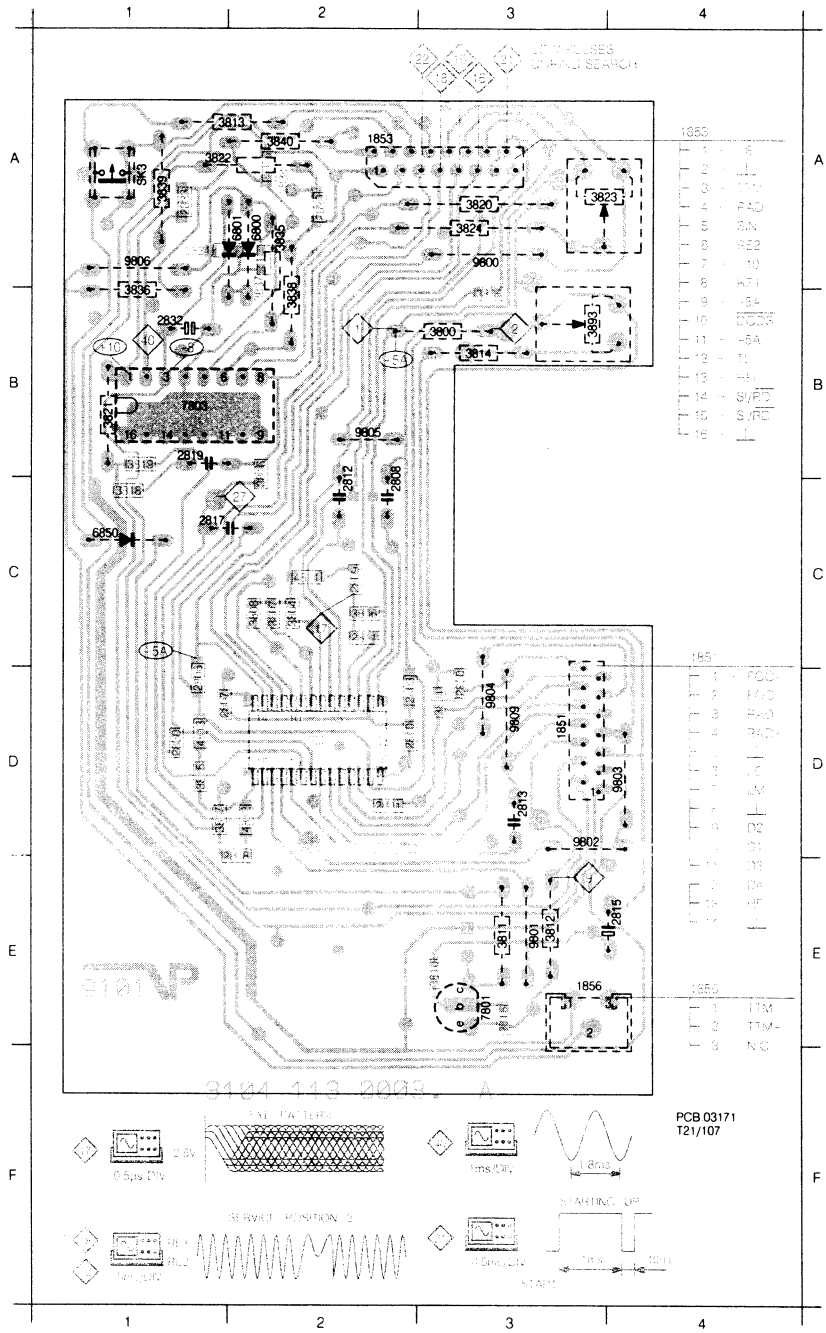

SK3	A1
1851	D3
1853	A2
1856	E3
2800	D3
2801	D2
2803	D2
2806	D1
2807	D2
2808	C2
2809	C2
2810	D2
2811	C2
2812	C2
2813	D3
2815	E4
2816	E3
2817	C1
2818	E1
2819	B1
2820	A2
2830	D1
2831	A1
2832	B1
2833	A1
2834	A2
3800	B3
3801	D3
3804	C2
3805	B3
3806	C2
3807	C2
3808	C2
3810	E3
3811	E3
3812	E3
3813	A1
3814	B3
3815	D1
3816	C2
3817	D1
3818	C1
3819	B1
3820	A3
3821	B1
3822	A1
3823	A3
3824	A3
3835	A2
3836	B1
3837	B2
3838	B2
3839	A1
3840	A2
3893	B3
4811	C2
4812	D2
4813	D1
6800	A2
6801	A2
6850	C1
7800	D2
7801	E3
7803	B1
9800	A3
9801	E3
9802	D3
9803	D4
9804	D3
9805	B2
9806	A1
9809	D3

11

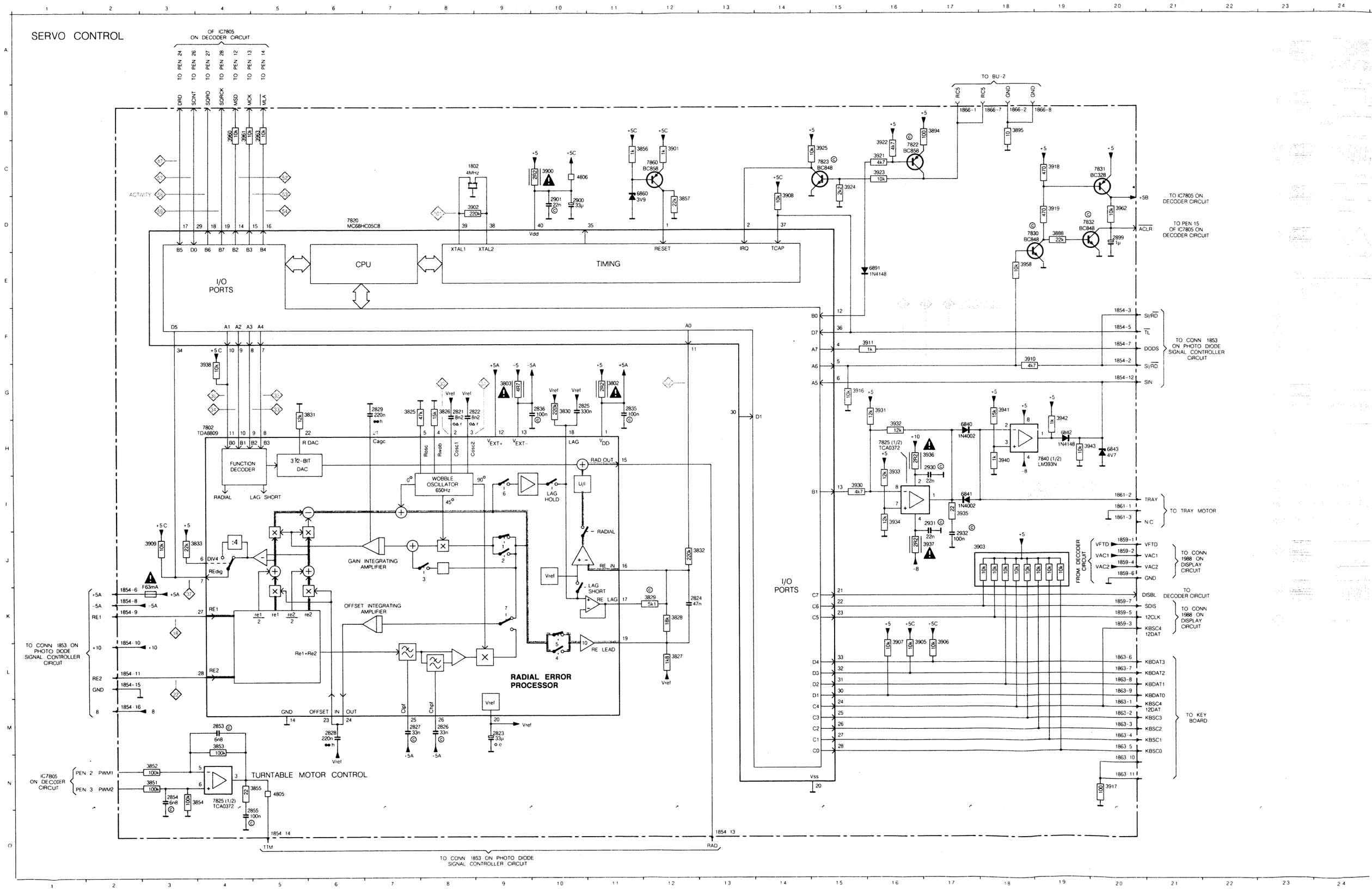
SERVO CONTROL
OF IC7805 ON DECODER CIRCUIT
TO PEN 24
TO PEN 26
TO PEN 27
TO PEN 28
TO PEN 12
TO PEN 13
TO PEN 14
DRD
SCINT
SQRO
SQRCK
MSD
MCK
MLA
ACTIVITY
7820 MC68HC05C8
CPU
TIMING
I/O PORTS
XTAL1
XTAL2
RESET
IRQ
TCAP
Vdd
1802 4MHz
7802 TDA8809
FUNCTION DECODER
RADIAL
LAG SHORT
3 1/2-BIT DAC
R DAC
Cagc
WOBBLE OSCILLATOR 650Hz
LAG HOLD
RAD OUT
U/I
RADIAL
RE IN
LAG SHORT
RE LAG
RE LEAD
GAIN INTEGRATING AMPLIFIER
OFFSET INTEGRATING AMPLIFIER
Re1+Re2
RADIAL ERROR PROCESSOR
GND
OFFSET
IN
OUT
Vref
TO CONN 1853 ON PHOTO DIODE SIGNAL CONTROLLER CIRCUIT
IC7805 ON DECODER CIRCUIT
PEN 2 PWM1
PEN 3 PWM2
TURNTABLE MOTOR CONTROL
7825 (1/2) TCA0372
TTM
RAD
TO CONN 1853 ON PHOTO DIODE SIGNAL CONTROLLER CIRCUIT
TO BU-2
RC5
GND
TO IC7805 ON DECODER CIRCUIT
TO PEN 15 OF IC7805 ON DECODER CIRCUIT
ACLR
TO CONN 1853 ON PHOTO DIODE SIGNAL CONTROLLER CIRCUIT
SI/RD
TL
DODS
SIN
TO TRAY MOTOR
TRAY
N.C
FROM DECODER CIRCUIT
VFTD
VAC1
VAC2
GND
TO CONN 1988 ON DISPLAY CIRCUIT
TO DECODER CIRCUIT
DISBL
SDIS
12CLK
KBSC4 12DAT
TO KEY BOARD
KBDAT3
KBDAT2
KBDAT1
KBDAT0
KBSC3
KBSC2
KBSC1
KBSC0
7840 (1/2) LM393N
7825 (1/2) TCA0372

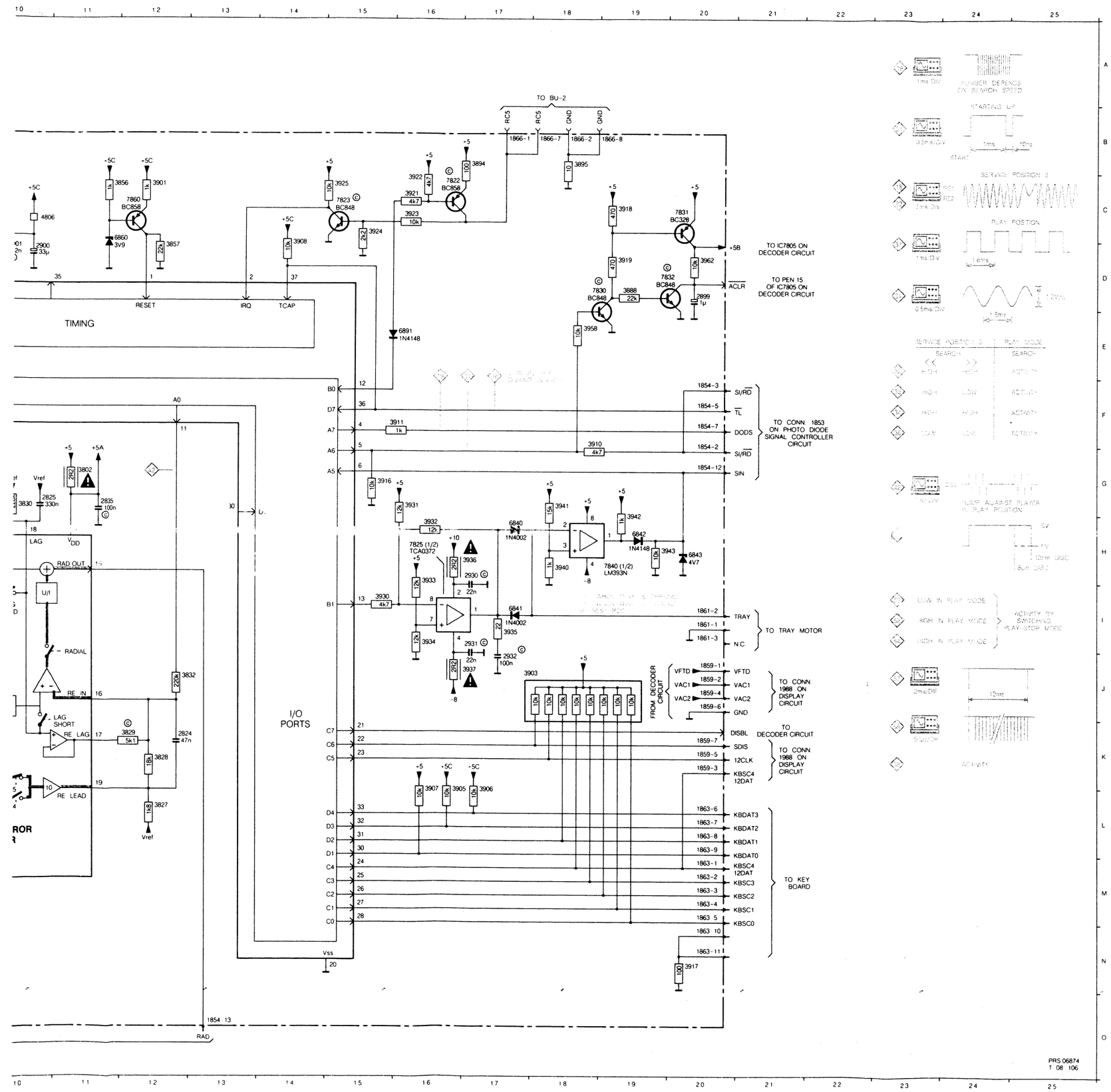

PRS 06874
T 08 106

1802 C8
2821 G8
2822 G8
2823 M9
2824 K12
2825 G10
2826 M8
2827 M7
2828 M6
2829 G7
2835 G11
2836 G10
2853 M4
2854 N3
2855 O4
2890 C17
2899 D20
2900 D10
2901 D10
2930 H17
2931 I17
2932 J17
3802 G11
3803 G9
3825 G7
3826 G8
3827 L12
3828 K12
3829 K12
3830 G10
3831 G5
3832 J12
3833 J3
3851 N3
3852 N3
3853 M4
3854 N3
3855 N4
3856 C11
3857 D12
3888 D19
3894 B17
3895 D17
3900 C10
3901 C12
3902 D8
3903 J17
3905 L16
3906 L17
3907 L16
3908 D14
3909 J3
3910 F18
3911 F16
3916 G15
3917 N20
3918 C19
3919 D19
3921 C16
3922 C16
3923 C16
3924 C15
3925 C15
3930 I15
3931 G16
3932 H16
3933 I16
3934 I16
3935 I17
3936 H17
3938 G4
3940 H18
3941 G18
3942 H19
3943 H19
3958 E18
3960 C4
3961 C4
3962 D20
3963 C5
4805 N5
4806 C10
6840 H17
6841 I17
6842 H19
6843 H20
6860 D11
6891 E16
7802 H4
7820 D6
7822 C16
7823 C15
7825 H16
7825 N4
7830 D18
7831 C20
7832 D19
7840 H19
7860 C12

12

SERVO CONTROL AND DECODER PANEL COMPONENT SIDE

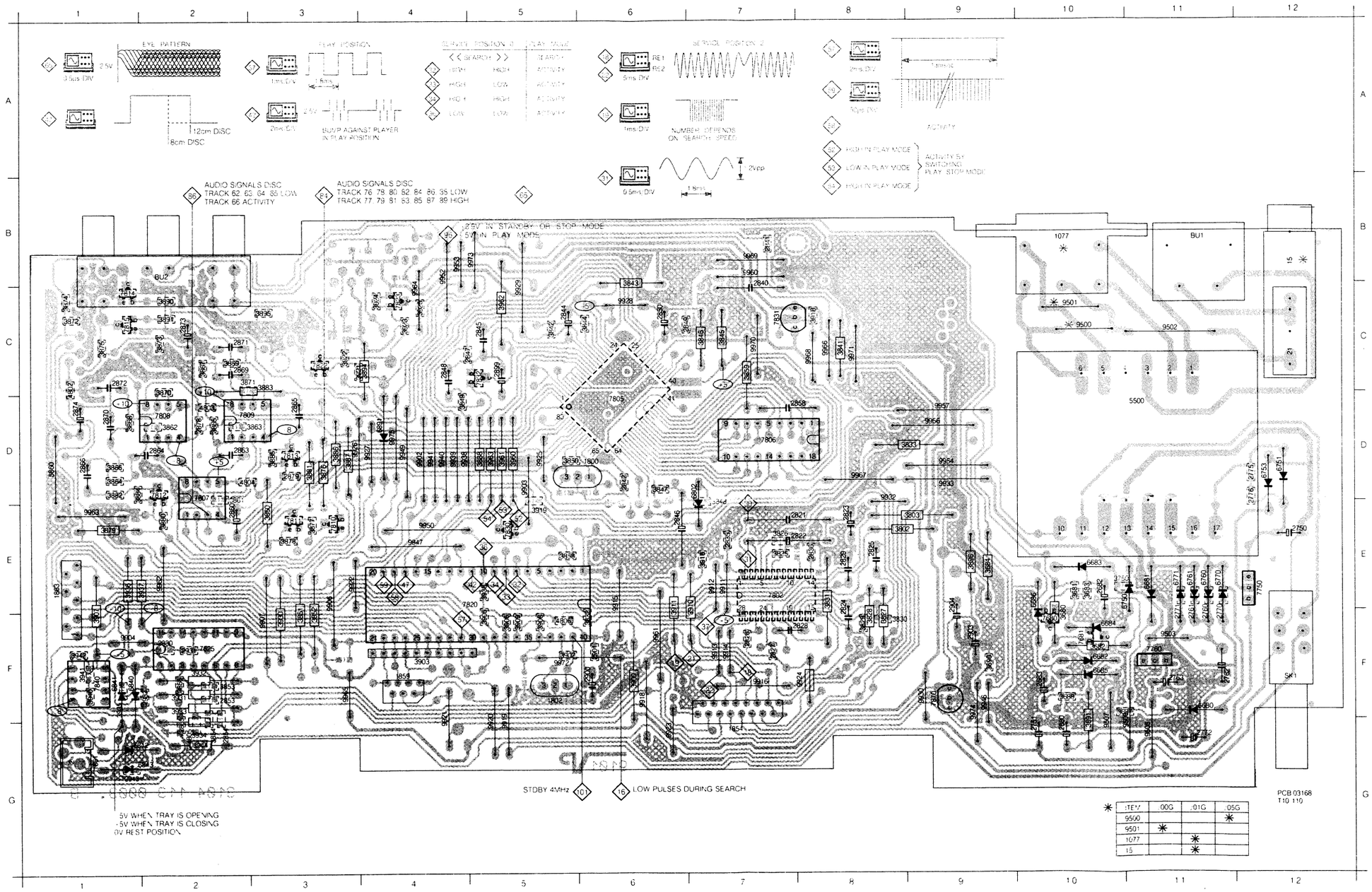

* ITEM	00G	01G	05G
9500			*
9501	*		
1077		*	
15		*	

15	B12	3860	E3	7813	D3
21	C12	3861	D2	7814	C1
BU1	B11	3862	D2	7815	C1
BU2	B2	3863	D2	7820	E4
SK1	F12	3864	D1	7822	C3
1077	B10	3865	D2	7823	C4
1800	D6	3866	D1	7825	F2
1802	F5	3867	C2	7830	E5
1854	G7	3868	D1	7831	C7
1859	F4	3869	C2	7832	C5
1861	G1	3870	C2	7840	F1
1863	E1	3871	C2	7870	F9
2680	G10	3872	C1	9500	C10
2682	E10	3873	C2	9501	C10
2683	F10	3874	C1	9502	C11
2750	E12	3875	C1	9503	F11
2751	G10	3876	D3	9505	G11
2760	F11	3877	E3	9506	G11
2761	F11	3878	E3	9507	G10
2762	F11	3879	E1	9902	D4
2763	F11	3880	E2	9903	D5
2770	F11	3881	D3	9904	F1
2771	F11	3882	D1	9906	E3
2772	G11	3883	C3	9907	F3
2775	D12	3884	D1	9911	E7
2776	E12	3885	D3	9912	E7
2821	E7	3886	D3	9913	F7
2822	E7	3887	D3	9914	F7
2823	E8	3888	D5	9915	F6
2824	F8	3890	C2	9916	F7
2825	E8	3891	C2	9918	F6
2826	F7	3894	C4	9919	G5
2827	F7	3895	C3	9920	G5
2828	F7	3896	E9	9921	G4
2829	E8	3900	F6	9922	E3
2835	E7	3902	F5	9923	G6
2836	E8	3903	F4	9924	F8
2840	C7	3905	F5	9925	D5
2841	B7	3906	F5	9926	D3
2842	D6	3907	F1	9927	D4
2844	C5	3908	F5	9928	C6
2845	C5	3909	F5	9929	C5
2846	E6	3910	F7	9930	F9
2847	C5	3911	F6	9932	D8
2848	C4	3916	E7	9933	D9
2849	C7	3918	C8	9938	D4
2850	C6	3919	E5	9939	D4
2853	F2	3921	C4	9940	D4
2854	G2	3922	C3	9941	D4
2855	G2	3923	C4	9946	F9
2858	D7	3924	C4	9947	E4
2860	E2	3925	C4	9949	D4
2863	D2	3930	F3	9950	E4
2864	D2	3931	F2	9952	B4
2865	D3	3932	F2	9953	B4
2866	D1	3933	F2	9954	D9
2869	C2	3934	G2	9956	D9
2870	D1	3935	F1	9957	D9
2871	C2	3936	E1	9960	B7
2872	C1	3937	E2	9961	F6
2873	C2	3938	E5	9962	E2
2874	D1	3940	F1	9963	E1
2878	D2	3941	F1	9964	[illegible]
2879	D3	3942	F1	9965	F3
2899	C5	3943	G1	9966	C8
2900	F6	3944	G2	9967	D8
2901	F6	3960	D5	9968	C8
2903	F9	3961	[illegible]	9969	B7
2904	F9	3962	[illegible]	9970	C7
2930	F2	3963	D5	9971	C8
2931	F2	[illegible]	C1	9972	F5
2932	F2	[illegible]	D2	9973	B5
3680	F10	[illegible]	D2	9974	G9
3681	E10	4605	G2	9975	D4
3682	F10	4606	F5		
3683	E10	5500	D11		
3684	E9	5860	D1		
3687	F10	6680	F11		
3688	F10	6681	E11		
3690	F9	6682	F10		
3691	G10	6683	E10		
3750	E10	6684	F10		
3803	E8	6685	F10		
3802	E8	6686	E10		
3825	E7	6750	F11		
3826	E7	6751	D12		
3827	F8	6753	D12		
3828	F8	6760	E11		
3829	F8	6761	E11		
3830	F8	6770	E11		
3831	E8	6771	E11		
3832	F6	6802	D7		
3833	D8	6840	F1		
3841	C8	6841	F1		
3842	C5	6842	G1		
3843	C6	6843	G1		
3844	C6	6891	D4		
3845	C7	7680	F10		
3846	C7	7681	F10		
3847	D6	7750	E12		
3848	E7	7760	F11		
3849	D4	7802	E7		
3850	D5	7805	D6		
3851	F3	7806	D7		
3852	F3	7807	D2		
3853	F2	7808	D2		
3854	G2	7809	D2		
3855	F2	7810	E3		
3858	E5	7811	E3		
3859	C7	7812	D2		

13

SERVO CONTROL AND DECODER PANEL SOLDER SIDE

15 B1	2683 F3	2823 E5	2846 E7	2869 C11	2931 F11	3825 E6	3846 C6	3862 D11	3876 D10	3891 C11	3916 E6	3936 E12	4804 D11	6753 D1	7760 F2	7822 C10	9507 G3	9920 G8	9939 D9	9962 E11
21 C1	2750 E1	2824 E5	2847 C9	2870 D12	2932 F12	3826 E6	3847 D7	3863 D10	3877 E10	3894 C9	3918 C5	3937 E12	4805 G11	6760 E2	7802 E6	7823 C9	9902 D9	9921 F9	9940 D9	9963 E12
BU1 B2	2751 G3	2825 E5	2848 C9	2871 C11	3680 E3	3827 F5	3848 D6	3864 D12	3878 E10	3895 C10	3919 D8	3938 E8	4806 F8	6761 E2	7805 C7	7825 F11	9903 D8	9922 E10	9941 D9	9964 C9
BU2 B11	2760 F2	2826 F6	2849 C7	2872 C12	3681 E3	3828 E5	3849 D9	3865 D11	3879 E12	3896 E4	3921 C10	3940 F12	5500 D2	6770 E2	7806 D6	7830 E8	9904 F12	9923 G7	9946 F4	9965 F10
SK1 F1	2761 F2	2827 F6	2850 C7	2873 C11	3682 F3	3829 F5	3850 D8	3866 D12	3880 E11	3900 F7	3922 C10	3941 F12	5860 D12	6771 E2	7807 D11	7831 C6	9906 E10	9924 F6	9947 E9	9966 C5
1077 B3	2762 F2	2828 F5	2853 F11	2874 D12	3683 E3	3830 F5	3851 F10	3867 C11	3882 D12	3902 F8	3923 C9	3942 F12	6680 F2	6802 E7	7808 D11	7832 C8	9907 F10	9925 D8	9949 D9	9967 D5
1800 D7	2763 F2	2829 E5	2854 G11	2878 D11	3684 E4	3831 E5	3852 F10	3868 D12	3883 C10	3903 F9	3924 C9	3943 G12	6681 E2	6840 F12	7809 D11	7840 F12	9911 E6	9926 D10	9950 E9	9968 C5
1802 F8	2770 F2	2835 E6	2855 G11	2879 D10	3687 F2	3832 F8	3853 F11	3869 C11	3884 D12	3905 F8	3925 C9	3944 G11	6682 F3	6841 F12	7810 E10	7870 F4	9912 E6	9927 D10	9952 B9	9969 B6
1854 G6	2771 F2	2836 E5	2858 D5	2899 C8	3688 F3	3833 D4	3854 G11	3870 C11	3885 D10	3906 F8	3930 F10	3960 D8	6683 E3	6842 G12	7811 E10	9500 C3	9913 F6	9928 C7	9953 B9	9970 C6
1859 F9	2772 G2	2840 B6	2860 E11	2900 F8	3690 F4	3841 C5	3855 F11	3871 C11	3886 D10	3907 F12	3931 F11	3961 D8	6684 F3	6843 G11	7812 D11	9501 C3	9914 F6	9929 C8	9954 D4	9971 C5
1861 G12	2775 D1	2841 B6	2863 D11	2901 F7	3691 G3	3842 C8	3858 E8	3872 C12	3887 D10	3908 F8	3932 F11	3962 C8	6685 F3	6891 D9	7813 D10	9502 C2	9915 E7	9930 F4	9956 D4	9972 F8
1863 E12	2776 D1	2842 D7	2864 D11	2903 F4	3750 E3	3843 B7	3859 C6	3873 C11	3888 D8	3909 F8	3933 F11	3963 D8	6686 E3	7680 F3	7814 B12	9503 F2	9916 F6	9932 D5	9957 D4	9973 B9
2680 G3	2821 E5	2844 C8	2865 D10	2904 E4	3802 E5	3844 C8	3860 E10	3874 C12	3890 C11	3910 E7	3934 G11	4802 C12	6750 E3	7681 F3	7815 C12	9505 G2	9918 F7	9933 D4	9960 B6	9974 F4
2682 E3	2822 E5	2845 C8	2866 D12	2930 F11	3803 E4	3845 C6	3861 D11	3875 C12		3911 E7	3935 F12	4803 D11	6751 D1	7750 E1	7820 E8	9506 G3	9919 G8	9938 D9	9961 F7	9975 D9

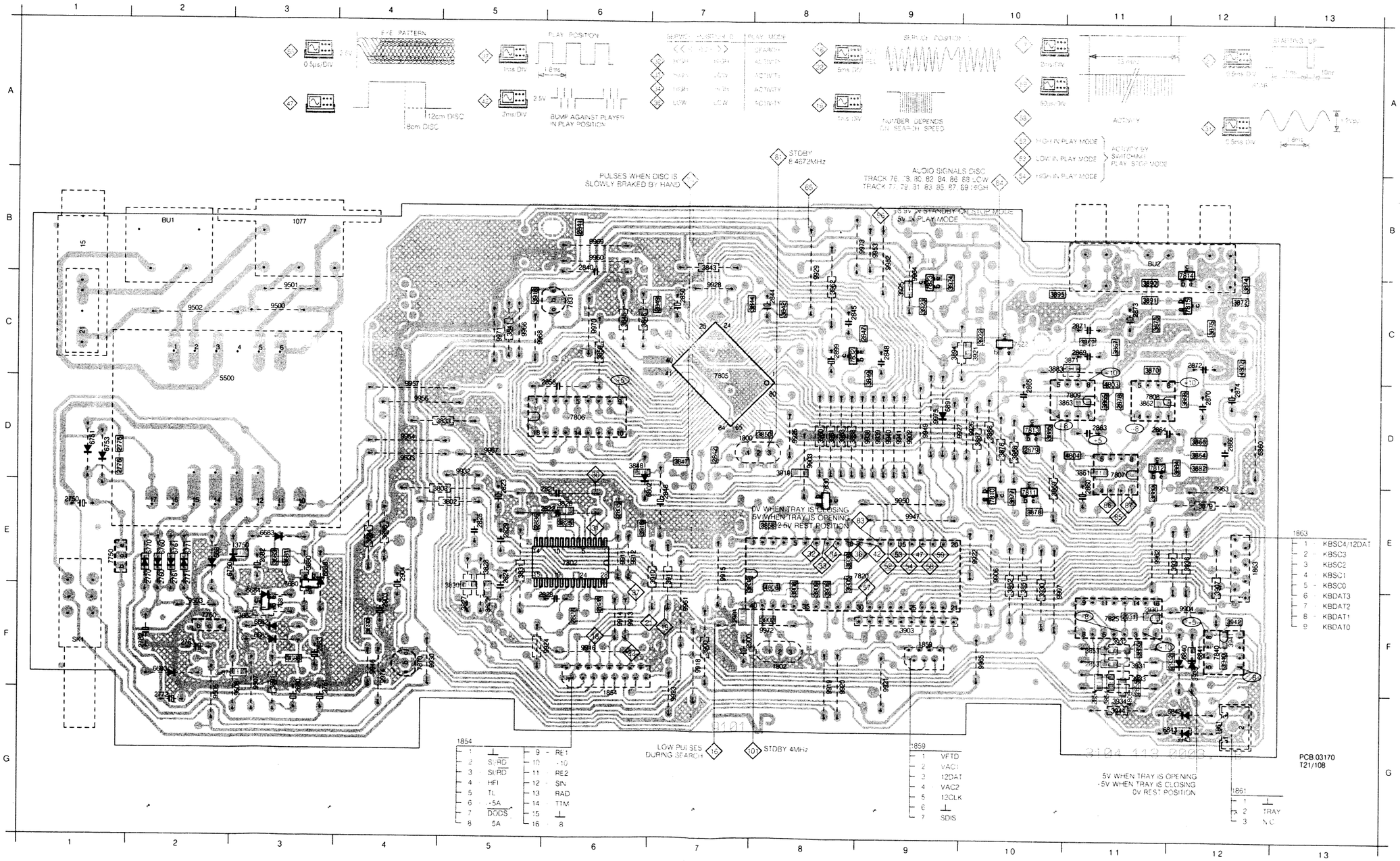

14

DECODER

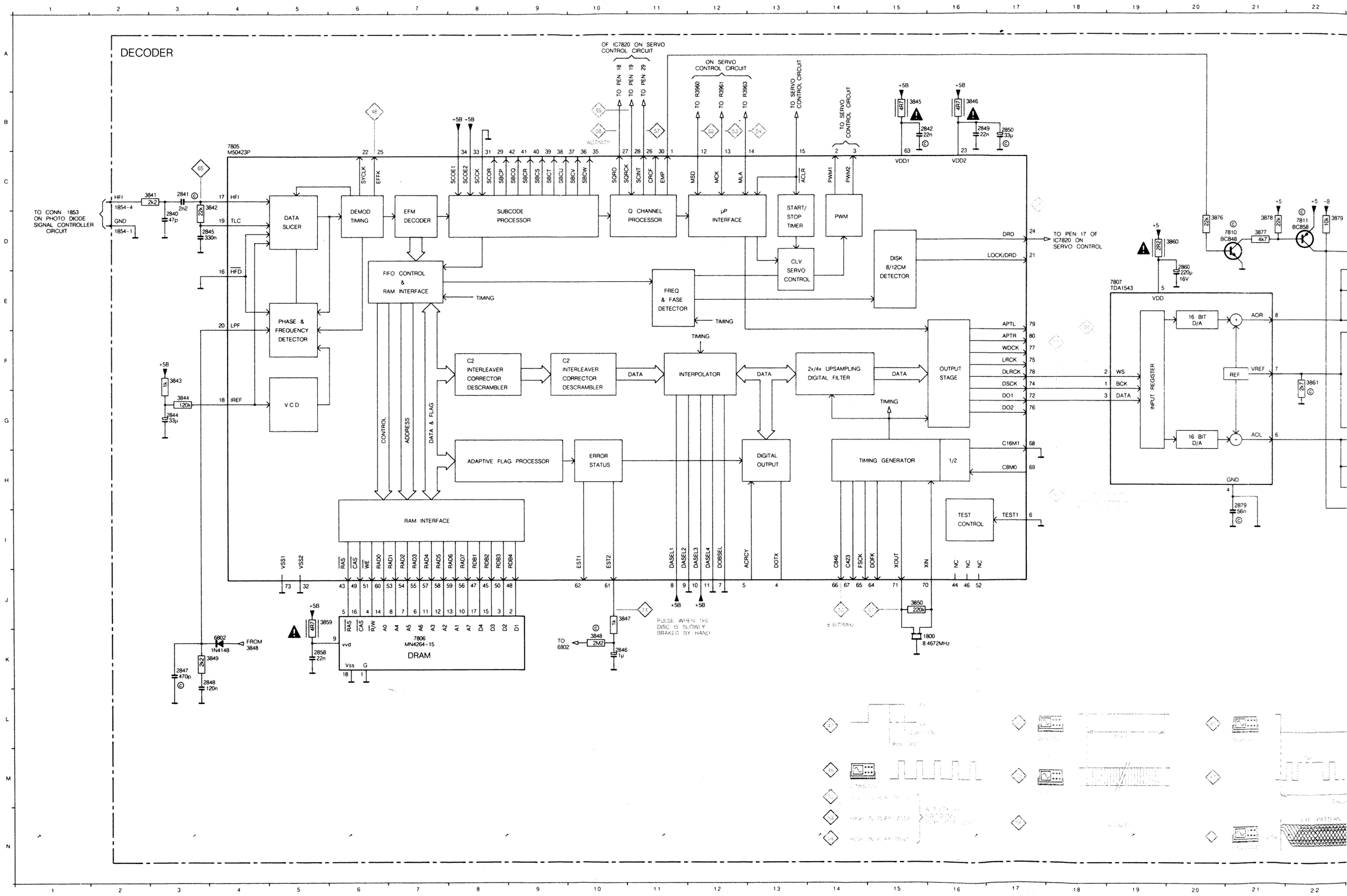
DECODER
7805
M50423P
TO CONN. 1853 ON PHOTO DIODE SIGNAL CONTROLLER CIRCUIT
HFI
GND
DATA SLICER
PHASE & FREQUENCY DETECTOR
V.C.D
DEMOD TIMING
EFM DECODER
SUBCODE PROCESSOR
Q CHANNEL PROCESSOR
μP INTERFACE
START/ STOP TIMER
PWM
FIFO CONTROL & RAM INTERFACE
FREQ & FASE DETECTOR
CLV SERVO CONTROL
DISK 8/12CM DETECTOR
TO PEN 17 OF IC7820 ON SERVO CONTROL
C2 INTERLEAVER CORRECTOR DESCRAMBLER
INTERPOLATOR
2x/4x UPSAMPLING DIGITAL FILTER
OUTPUT STAGE
ADAPTIVE FLAG PROCESSOR
ERROR STATUS
DIGITAL OUTPUT
TIMING GENERATOR
TEST CONTROL
RAM INTERFACE
7806
MN4264-15
DRAM
7807
TDA1543
INPUT REGISTER
16 BIT D/A
REF
VDD
GND
OF IC7820 ON SERVO CONTROL CIRCUIT
ON SERVO CONTROL CIRCUIT
TO SERVO CONTROL CIRCUIT
PULSE WHEN THE DISC IS SLOWLY BRAKED BY HAND
8.4672MHz
FROM 3848
TO 6802

14

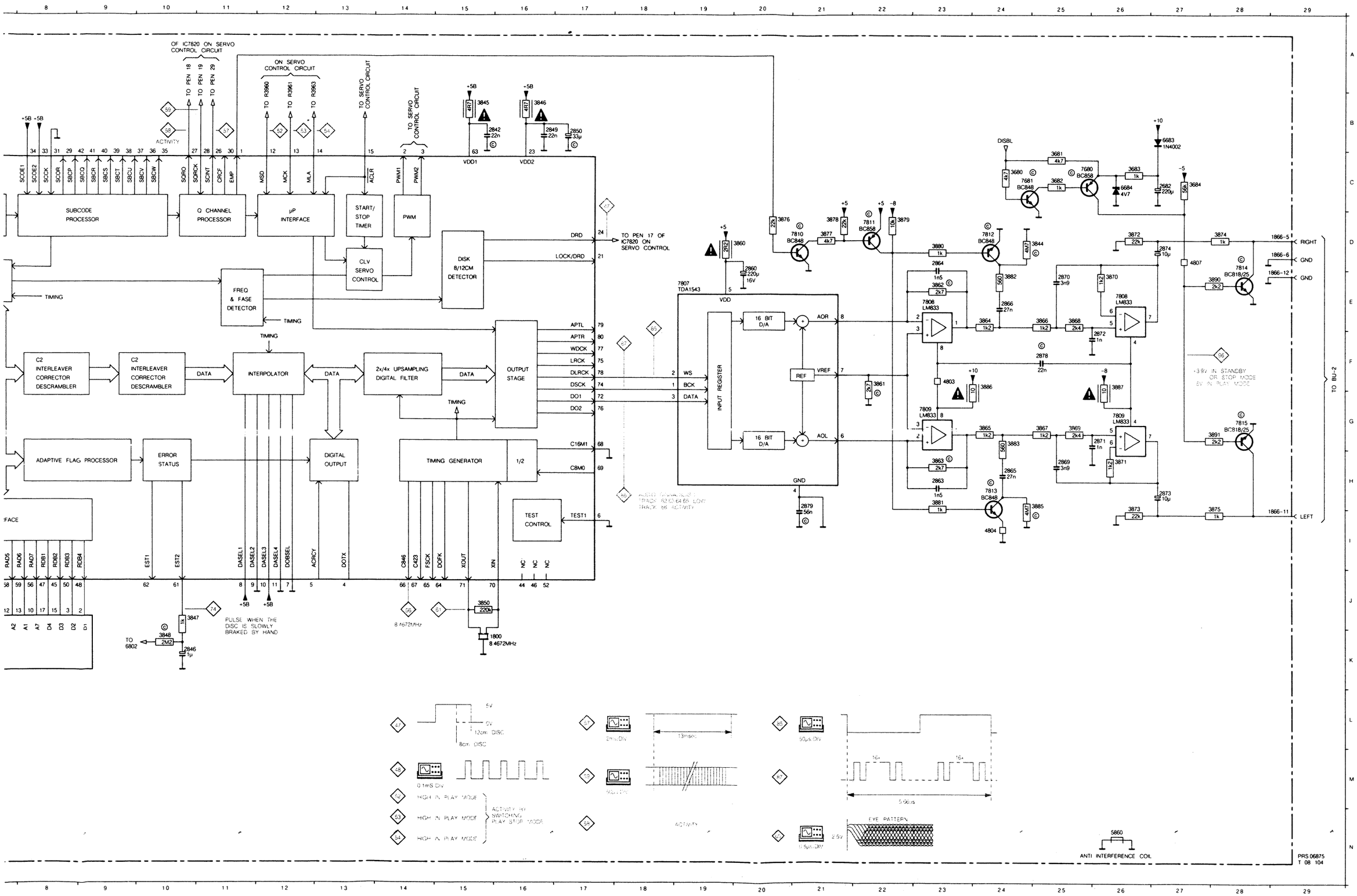

1800 K15
2682 C27
2840 D3
2841 C3
2842 B15
2844 G3
2845 D3
2846 K10
2847 K3
2848 K3
2849 B16
2850 B17
2858 K5
2860 E20
2863 H23
2864 D23
2865 H24
2866 E24
2869 H25
2870 E25
2871 G26
2872 F26
2873 H27
2874 D27
2878 F25
2879 H21
3680 C24
3681 C25
3682 C25
3683 C26
3684 C27
3841 C3
3842 C3
3843 F3
3844 D25
3844 G3
3845 B15
3846 B16
3847 J10
3848 K10
3849 K3
3850 J15
3859 J5
3860 D20
3861 F22
3862 E23
3863 H23
3864 E24
3865 G24
3866 E25
3867 G25
3868 E25
3869 G25
3870 E26
3871 H26
3872 D26
3873 I 26
3874 D28
3875 I 28
3876 D20
3877 D21
3878 D21
3879 D22
3880 D23
3881 H23
3882 E24
3883 G24
3885 H25
3886 G24
3887 G26
3890 E28
3891 G28
4803 F23
4804 I 24
4807 D27
5860 N26
6683 B27
6684 C26
6802 K4
7680 C25
7681 C24
7805 B4
7806 K7
7807 E19
7808 E23
7808 E26
7809 G23
7809 G26
7810 D21
7811 D22
7812 D24
7813 H24
7814 D28
7815 G28

DISPLAY AND KEYBOARD

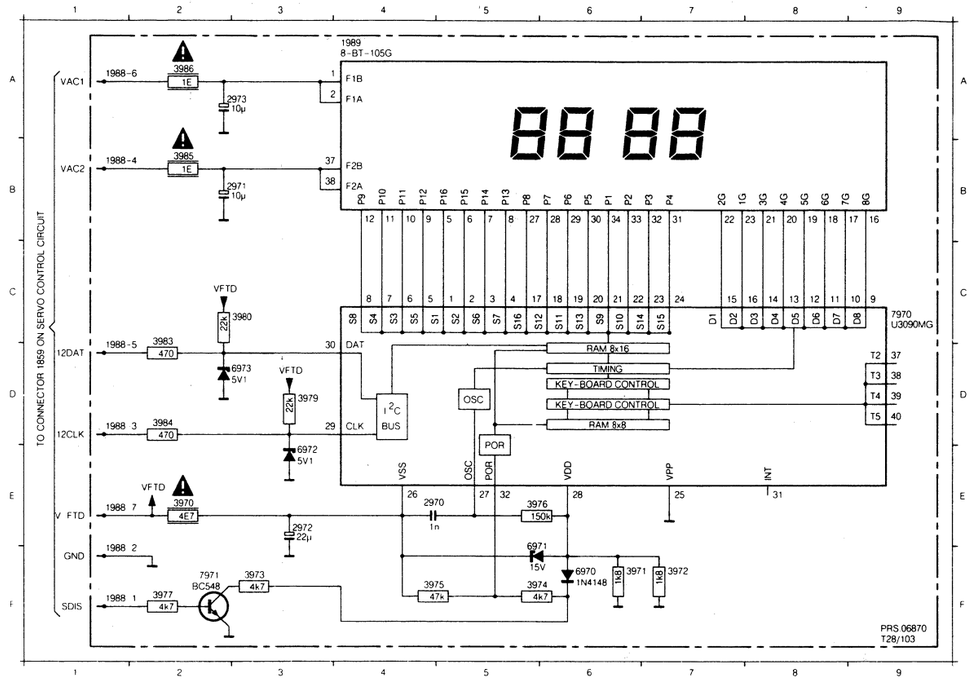

1989 A4
2970 E4
2971 B2
2972 E3
2973 A2
3970 E2
3971 F6
3972 F7
3973 F3
3974 F5
3975 F4
3976 E5
3977 F2
3979 D3
3980 C3
3983 D2
3984 D2
3985 B2
3986 A2
6970 F6
6971 F5
6972 E3
6973 D3
7970 C9
7971 F2

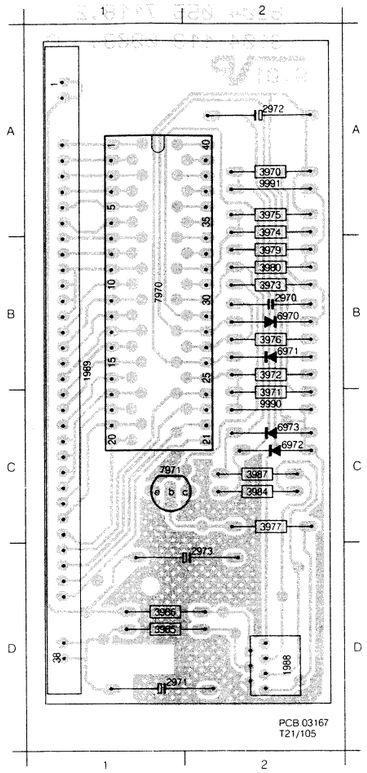

1988 D2
1989 B1
2970 B2
2971 D1
2972 A2
2973 D2
3970 A2
3971 C2
3972 B2
3973 B2
3974 B2
3975 A2
3976 B2
3977 C2
3979 B2
3980 B2
3984 C2
3985 D1
3986 D1
3987 C2
6970 B2
6971 B2
6972 C2
6973 C2
7970 B1
7971 C1
9990 C2
9991 A2

KEYBOARD

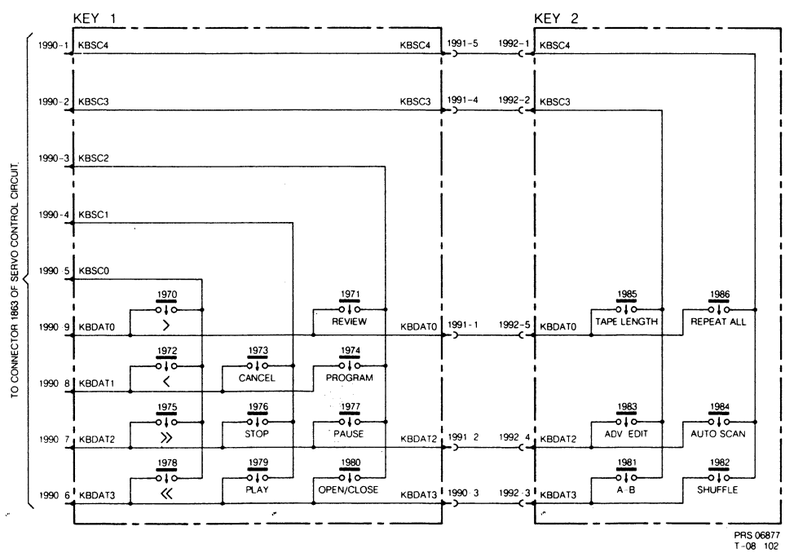

KEY 1

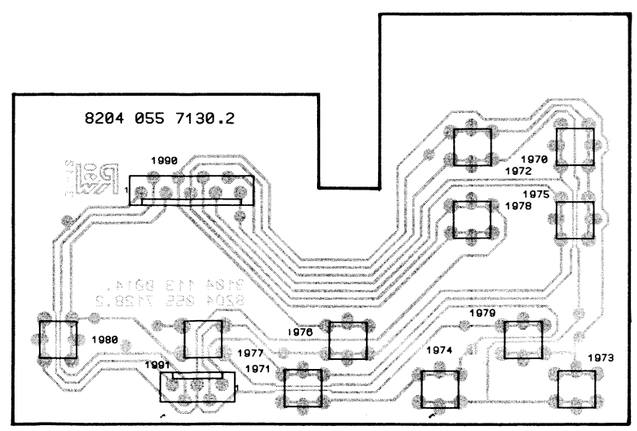

45 634 A14

KEY 2

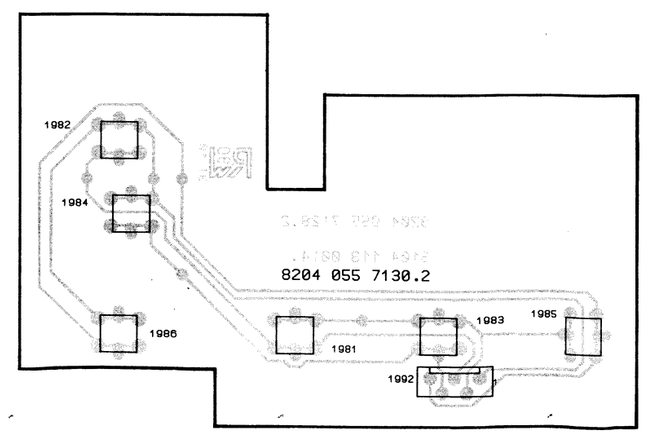

45 635 A14

SERVICE TESTPROGRAM

SERVICE MODE IS ENTERED BY PRESSING NEXT + PLAY + POWER ON

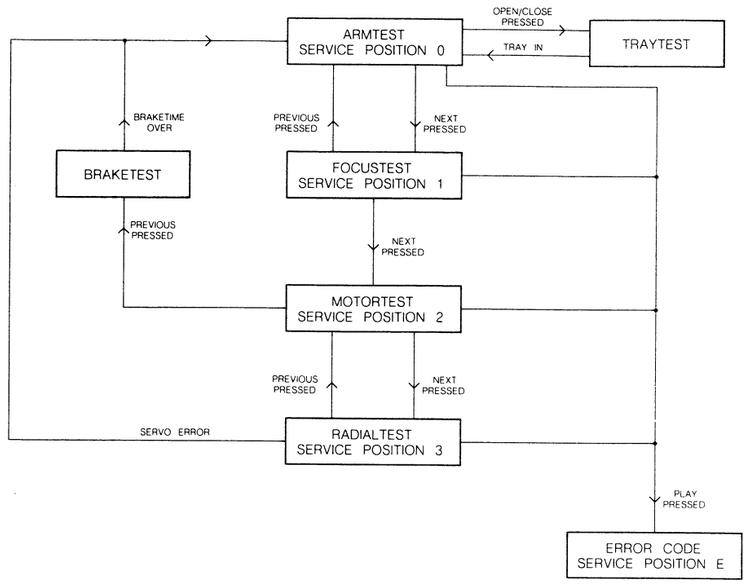

PRS 06887
1 08 104

ERROR CODE TABLE

SYSTEM ERRORS

ERROR 01 Tray error
ERROR 02 Focus error
ERROR 03 Radial error
ERROR 04 Disc error : DRD becomes not low
ERROR 05 TL low to long

ERROR 06 Jump error
ERROR 07 Subcode error
ERROR 08 TOC error

OPERATING ERRORS

ERROR 31 Search time out error
ERROR 32 Binary search time out error
ERROR 33 Index not found
ERROR 34 Relative time not found
ERROR 35 Next/Previous when scanning

ERROR 36 Programmed track is not existing on this CD
ERROR 37 Selected track is not existing on this CD
ERROR 38 Next at a border when repeat is off
ERROR 39 Previous at a border when repeat is off
ERROR 40 Finding error

ERROR 41 Review error
ERROR 42 Program memory full
ERROR 43 Program pressed while playing
ERROR 44 Cancel pressed while not in review
ERROR 45 Program pressed while no track selected

ERROR 46 Program pressed while scanning program
ERROR 47 A-B pressed while not in play
ERROR 48 A-B pressed in scan
ERROR 49 Search pressed in scan
ERROR 50 Edit pressed in play mode

ERROR 51 No track possible to play in edit mode
ERROR 52 Tape pressed while not in time-input mode
ERROR 53 Not allowed keys pressed in CD-dubbing
ERROR 54 Not allowed keys pressed in edit-play/pause
ERROR 55 Not allowed key pressed in edit time-input

ERROR 56 Not allowed key pressed in standby
ERROR 57 Fast forward pressed while not in play
ERROR 58 Fast reverse pressed while not in play
ERROR 59 EOT received while playing edit

FAULTFINDING GUIDE

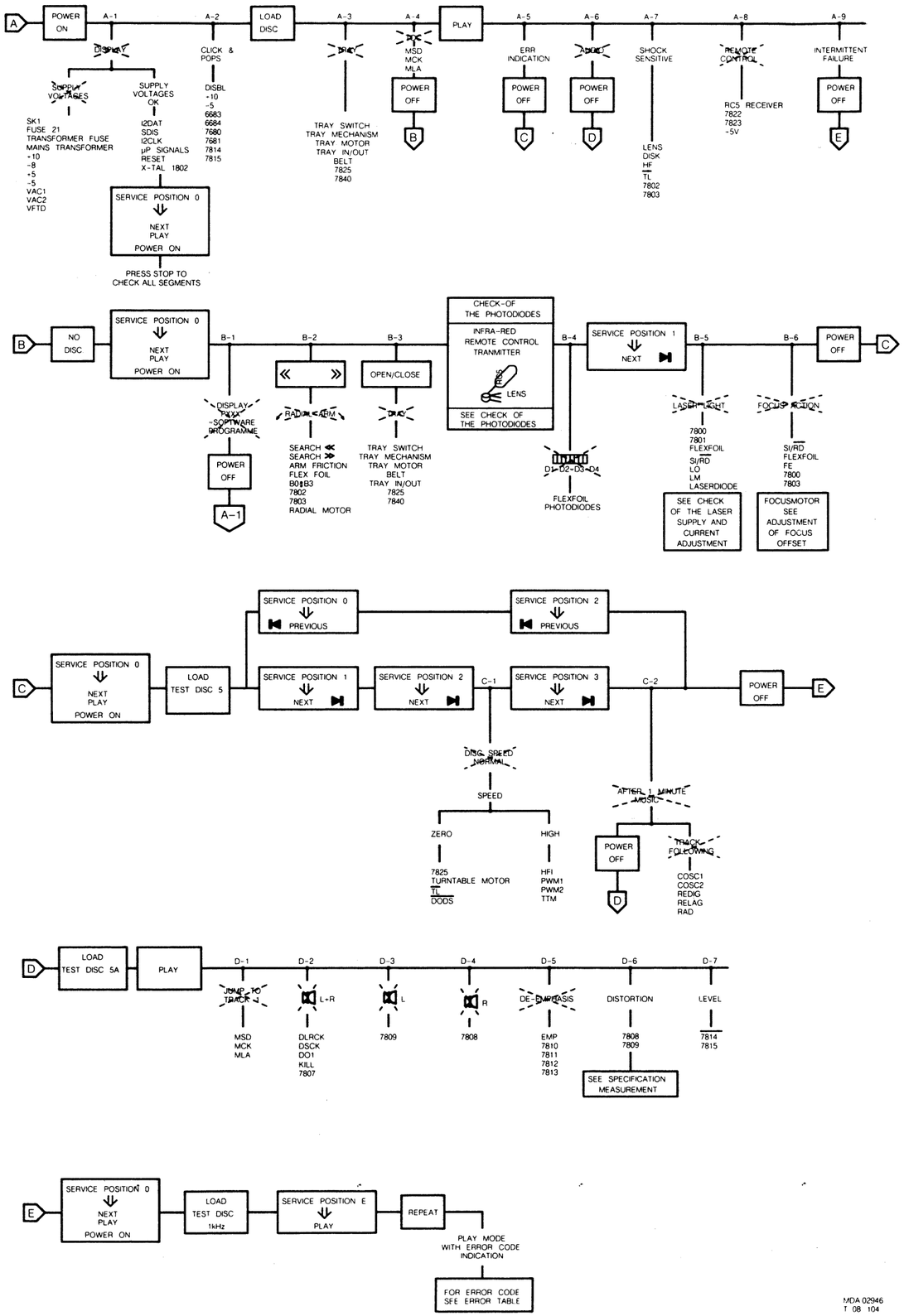

MDA 02946
T 08 104

START UP PROCEDURE

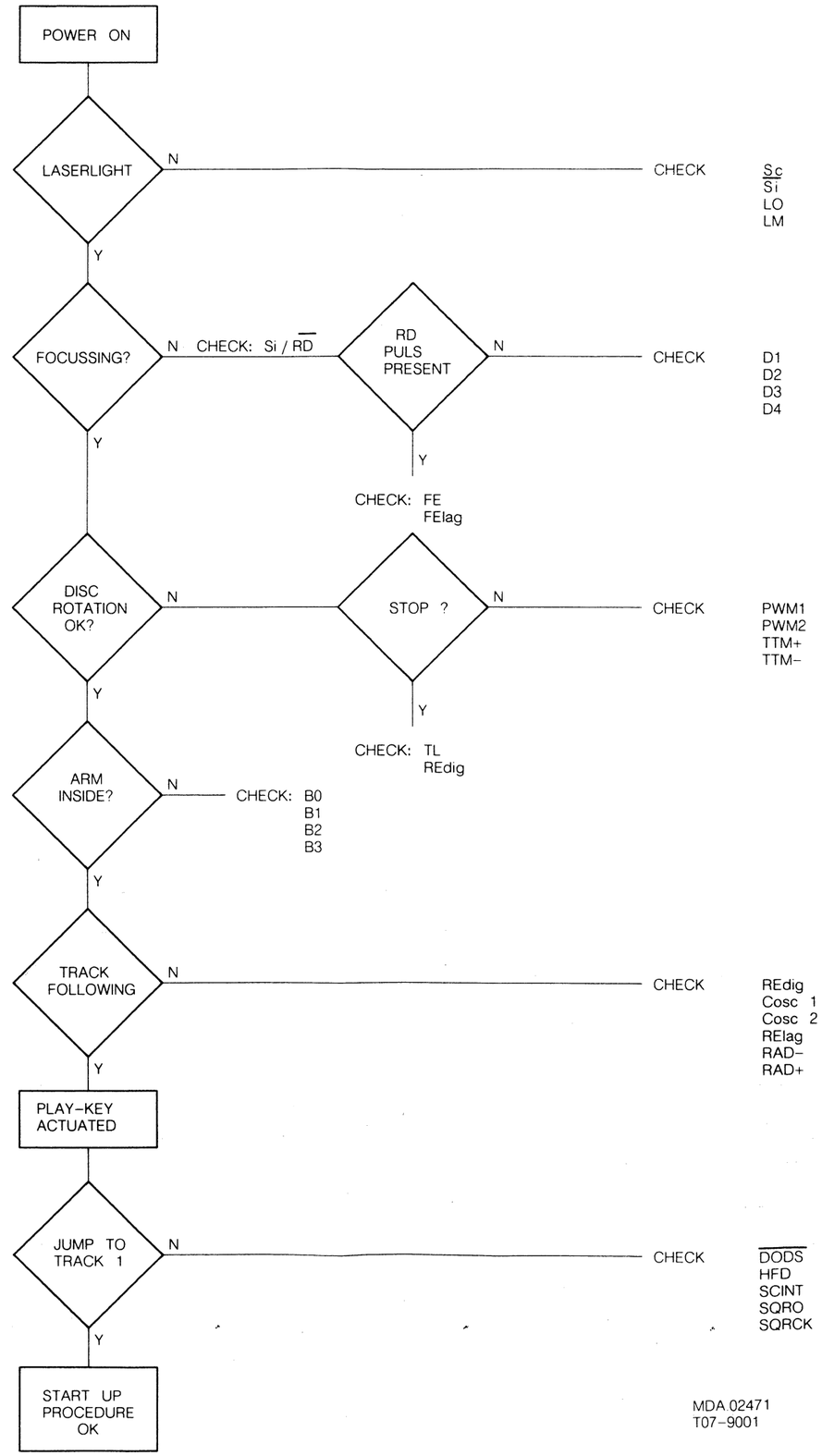

MDA 02471
T07-9001

B-3 CHECK OF THE PHOTODIODES

Step	Signal	Mode	◇	∅			Remarks
1	D2 D1 D3 D4	power on	4 6 7 8	–	–	signal 4=6=7=8	Signal depends on Distance lens ↔ IR LED of remote control

T-23267A

B-4 CHECK OF LASER SUPPLY

The laser, the lasersupply plus the monitor diode form a feedback system.
A defect in the lasersupply may result in the destruction of the laser. If, in that case, the laser is replaced, (= complete C.D.M.-unit) the new laser will also become defective. However, it is impossible to check and repair a feedback system if a link is missing. For this reason the laser supply can be checked with teh replacement circuit for laser assembly.

Step	Signal	Mode	◇		Remarks
1	LO	serv. pos. 2 SK	9 V ⊥	1.8<V <2.3	REPLACEMENT CIRCUIT FOR LASER ASSEMBLY 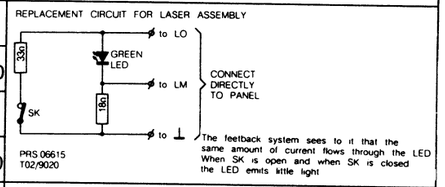 to LO GREEN LED 330Ω to LM CONNECT DIRECTLY TO PANEL SK<|
	LM		11 V ⊥	170<mV <220	
2	LO	serv. pos. 2 SK	9 V ⊥	1.8<V <2.3	
	LM		11 V ⊥	170<mV <220	
3	LO	Power on	9 V ⊥	0V ± 0.2V	No light

After opening SK, the led will emit more light for a short moment.

T-23267B

B-4 LASER CURRENT ADJUSTMENT

Step	Signal	Mode	◇	∅			Remarks
1	–	Power off	–	–	–	–	Check if FLEX-FOIL is properly connected
2	–	Power off	11 Ω ⊥	R3893	1kΩ +10% −0	–	Pre-adjustment Ohmic value
3	–	Power off	–	R2823	–	–	Set to mid-position
4	laser current ≙ voltage across R3800	Test disc 5A play	1 V 2 mV DC	–	⩾ 15mV	–	If < 15mV then go to step 3 and set R3823 to 1/4 or 3/4. Try again.
5	laser current ≙ voltage across R3800	Test disc 5A play	1 V 2 mV DC	R3893	50mV	–	–
6	FE-LAG	Test disc 5A track 1 play	27 V ⊥	R3823	400mV	–	Fine adjustment

T-23267C

B-5 ADJUSTMENT OF FOCUS-OFFSET

Step	Signal	Mode	◇	∅			Remarks
1	–	Power on no disc	–	R2823	–	–	adjust for optical mid-position of the focus motor
2	FE LAG	Play Test disc 5 Track 1	27	R2823	400mV ± 40 mV DC	–	fine adjustment

T-23267D

D-6 SPECIFICATIONS MEASUREMENT

Signal	Mode	◇			Remarks
BU2-L	Test disc 3, play, total harmonic distorsion	filter output	See technial data		See drawing 30459A12
BU2-R	Test disc 3, play, total harmonic distorsion	filter output	See technial data		See drawing 30459A12
BU2-L	Test disc 3, play signal-to-noise ratio	filter output	See technial data		See drawing 30459A12
BU2-R	Test disc 3, play signal-to-noise ratio	filter output	See technial data		See drawing 30459A12

Filter = 13th order filter 4822 395 30204

T-23267M

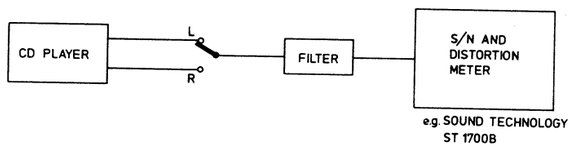

30 459 A12

18

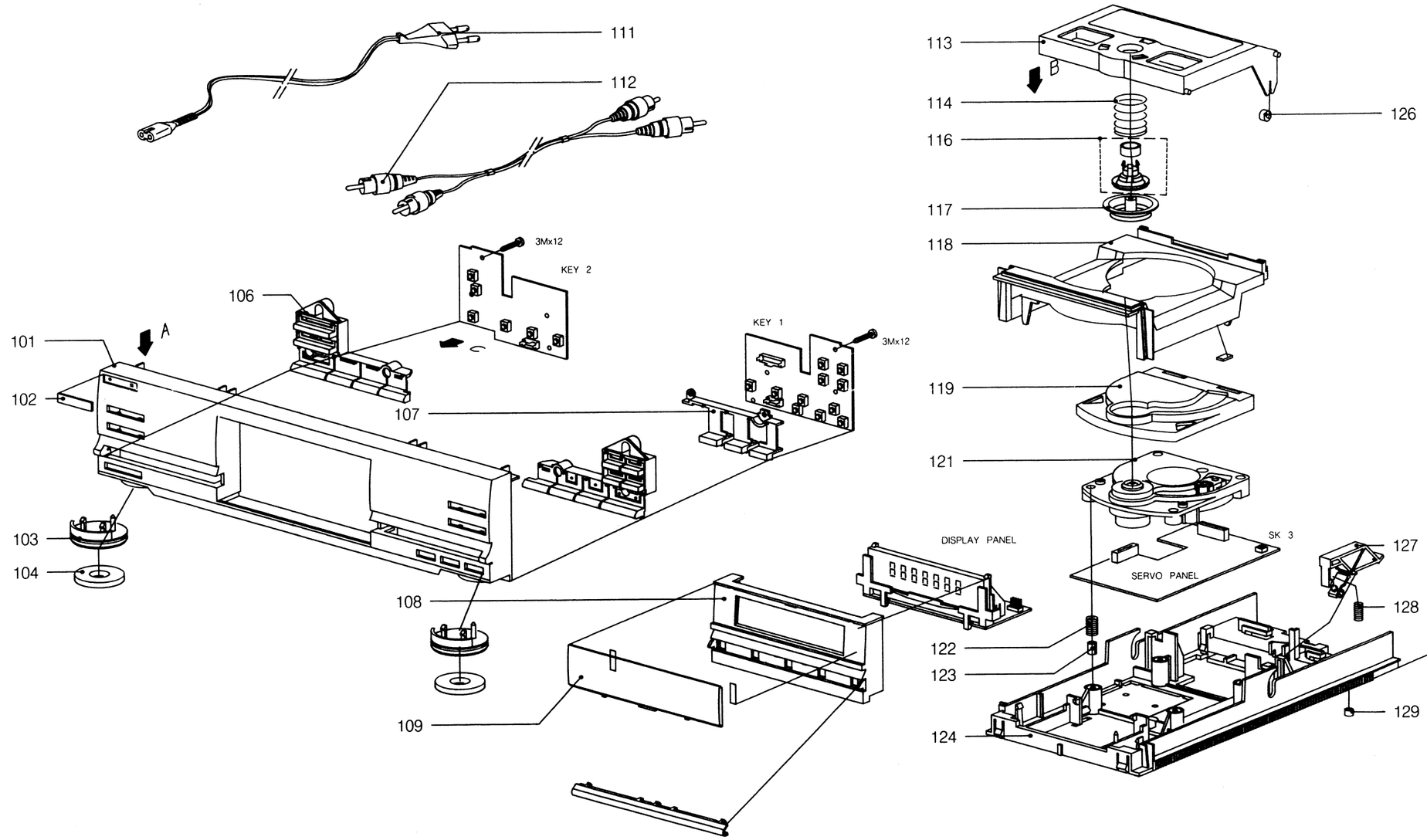

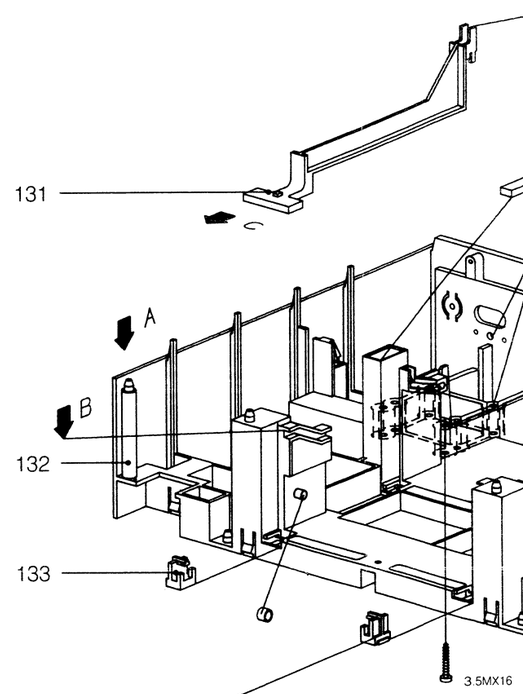

MECHANICA

101	4822 4
102	4822 4
103	4822 4
103	4822 4
104	4822 4
104	4822 4
106	4822 4
107	4822 4
108	4822 4
109	4822 4
111	4822 3
112	4822 3
113	4822 4
114	4822 4
116	4822 5
117	4822 4
118	4822 4
119	4822 4
121	4822 6
122	4822 4

18

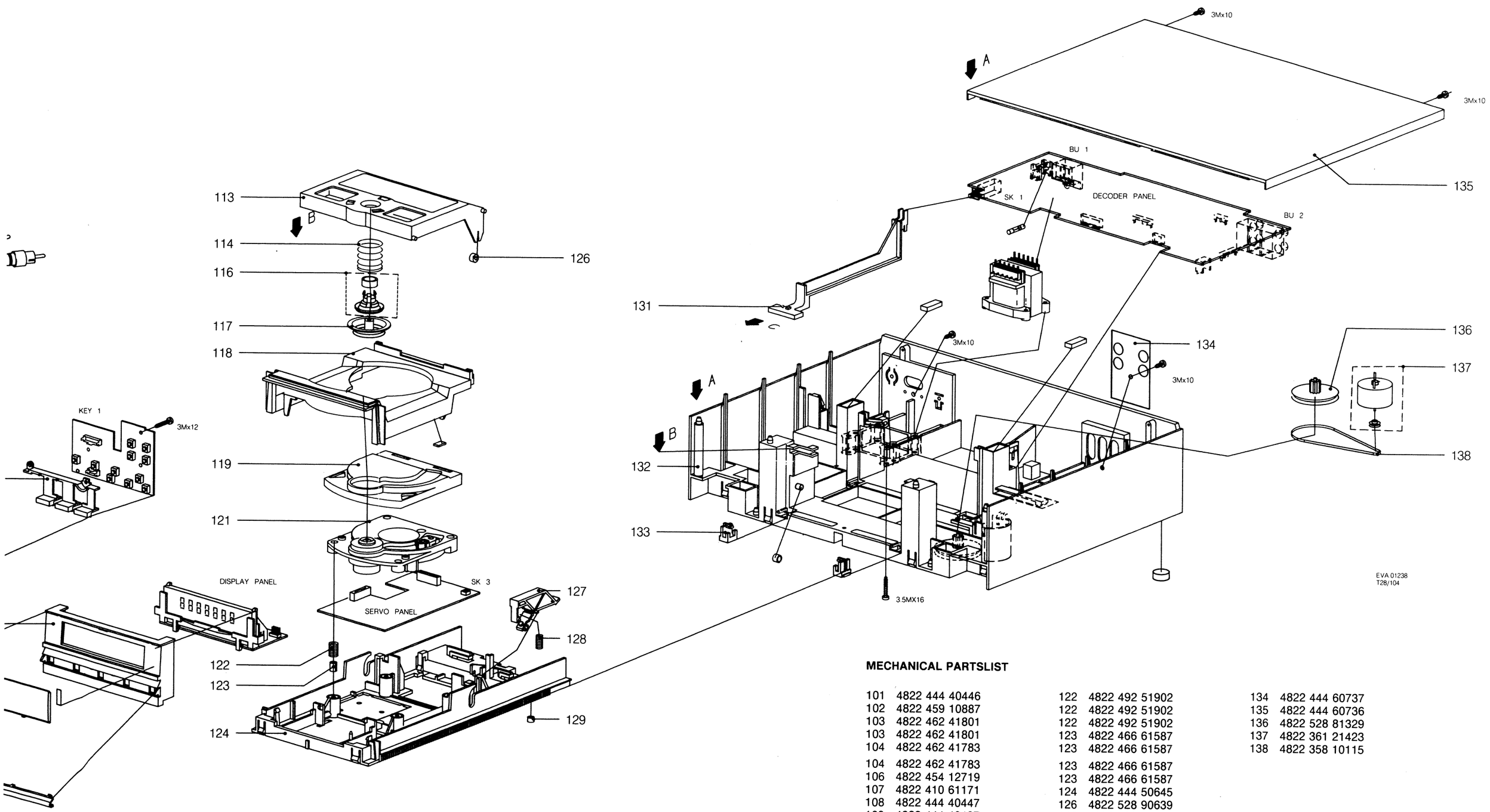

MECHANICAL PARTSLIST

101	4822 444 40446	122	4822 492 51902	134	4822 444 60737
102	4822 459 10887	122	4822 492 51902	135	4822 444 60736
103	4822 462 41801	122	4822 492 51902	136	4822 528 81329
103	4822 462 41801	123	4822 466 61587	137	4822 361 21423
104	4822 462 41783	123	4822 466 61587	138	4822 358 10115
104	4822 462 41783	123	4822 466 61587		
106	4822 454 12719	123	4822 466 61587		
107	4822 410 61171	124	4822 444 50645		
108	4822 444 40447	126	4822 528 90639		
109	4822 444 40437	126	4822 528 90639		
111	4822 321 10249	127	4822 402 61322		
112	4822 321 22832	128	4822 492 52123		
113	4822 466 92841	129	4822 532 51756		
114	4822 492 52159	129	4822 532 51756		
116	4822 535 93054	131	4822 410 61181		
117	4822 492 33145	132	4822 464 50842		
118	4822 444 60735	133	4822 402 61323		
119	4822 454 30438	133	4822 402 61323		
121	4822 691 30209	133	4822 402 61323		
122	4822 492 51902	133	4822 402 61323		

Miscellaneous

BU-1	4822 265 20291	
BU-2	4822 267 31328	
SK1	4822 276 13077	
1851	4822 267 50676	CONNECTOR 14P
1856	4822 264 40207	CONNECTOR 3P MALE
1861	4822 264 40207	CONNECTOR 3P MALE
1863	4822 267 50721	SOCKET

Crystal

1800	4822 242 73557	4,00 Mhz
1802	4822 242 72527	4,00 MHZ CERAMIC RESONATOR

2680	4822 124 40272	33µF 20% 16V
2682	4822 124 40196	220µF 20% 16V
2683	4822 124 40435	10µF 20% 50V
2750	5322 124 22094	220µF 20% 50V
2751	4822 124 41596	22µF 20% 50V
2760	4822 122 33809	22nF 20% 50V
2761	4822 122 33809	22nF 20% 50V
2762	4822 124 23268	3300µF 20% 16V
2763	4822 124 40272	33µF 20% 16V
2770	4822 122 33809	22nF 20% 50V
2771	4822 122 33809	22nF 20% 50V
2772	4822 124 41853	1000µF 20% 16V
2775	4822 122 33809	22nF 20% 50V
2776	4822 122 33809	22nF 20% 50V
2821	4822 121 51321	8,2µF 1% 63V
2822	4822 121 51321	8,2µF 1% 63V
2823	4822 124 40272	33µF 20% 16V
2824	4822 121 43526	47nF 5% 100V
2825	5322 121 42661	330nF 5% 63V
2826	4822 122 33342	33nF 10% 63V
2827	4822 122 33342	33nF 10% 63V
2828	4822 121 43375	220nF 5% 63V
2829	4822 121 43375	220nF 5% 63V
2835	4822 122 33496	100nF 10% 63V
2836	4822 122 33496	100nF 10% 63V
2840	4822 122 10181	47pF 5% 50V
2841	4822 122 33175	2,2nF 20% 50V
2842	4822 122 33809	22nF 20% 50V
2844	4822 124 40272	33µF 20% 16V
2845	5322 121 42661	330nF 5% 63V
2846	4822 124 22028	1µF 20% 63V
2847	5322 122 32268	470pF 10% 50V
2848	4822 121 43396	120nF 5% 63V
2849	4822 122 33809	22nF 20% 50V
2850	4822 124 40272	33µF 20% 16V
2853	5322 122 31866	6,8nF 10% 63V
2854	5322 122 31866	6,8nF 10% 63V
2855	4822 122 33496	100nF 10% 63V
2858	4822 122 10166	22nF 30% 16V
2860	4822 124 40196	220µF 20% 16V
2863	4822 121 43868	1,5nF 5% 50V
2864	4822 121 43868	1,5nF 5% 50V
2865	4822 121 43873	27nF 5% 50V
2866	4822 121 43873	27nF 5% 50V
2869	5322 121 42927	3,9nF 5% 250V
2870	5322 121 42927	3,9nF 5% 250V
2871	4822 121 43897	1nF 5% 50V
2872	4822 121 43897	1nF 5% 50V
2873	4822 124 40435	10µF 20% 50V
2874	4822 124 40435	10µF 20% 50V
2878	4822 122 33809	22nF 20% 50V
2879	4822 122 33105	56nF 10% 63V
2899	4822 124 40242	1µF 20% 63V
2900	4822 124 40272	33µF 20% 16V
2901	4822 122 33809	22nF 20% 50V
2903	4822 124 40272	33µF 20% 16V
2904	4822 124 40272	33µF 20% 16V
2930	4822 122 33809	22nF 20% 50V
2931	4822 122 33809	22nF 20% 50V
2932	4822 122 33496	100nF 10% 63V

3680	4822 116 52921	4k7 1% 0,6W
3681	4822 051 20472	4k7 5% 0,1W
3682	4822 050 21002	1k 1% 0,6W
3683	4822 051 10102	1k 2% 0,25W
3684	4822 050 25603	56k 1% 0,6W
3687	4822 051 20681	680Ω 5% 0,1W
3688	4822 051 20103	10k 5% 0,1W
3690	4822 051 20223	22k 5% 0,1W
3691	4822 052 10228	2Ω2 5%
3750	4822 051 20751	750Ω 5% 0,1W
3802	4822 052 10228	2Ω2 5%
3803	4822 052 10478	4Ω7 5% 0,33W
3825	4822 051 20473	47k 5% 0,1W
3826	4822 051 20153	15k 5% 0,1W
3827	4822 050 21802	1k8 1% 0,6W
3828	4822 050 21803	18k 1% 0,6W
3829	4822 051 20512	5k1 5% 0,1W
3830	4822 051 20224	220k 5% 0,1W
3831	4822 050 21273	12k7 1% 0,6W
3832	4822 051 20224	220k 5% 0,1W
3833	4822 050 22203	22k 1% 0,6W
3841	4822 050 22202	2k2 1% 0,6W
3842	4822 051 20223	22k 5% 0,1W
3843	4822 051 10101	100Ω 2% 0,25W
3844	4822 051 20124	120k 5% 0,1W
3845	4822 052 10478	4Ω7 5% 0,33W
3846	4822 052 10478	4Ω7 5% 0,33W
3847	4822 051 10102	1k 2% 0,25W
3848	4822 051 20225	2M2 5% 0,1W
3849	4822 051 20222	2k2 5% 0,1W
3850	4822 051 20224	220k 5% 0,1W
3851	4822 116 52234	100k 5% 0,5W
3852	4822 116 52234	100k 5% 0,5W
3853	4822 051 20104	100k 5% 0,1W
3854	4822 051 20104	100k 5% 0,1W
3855	4822 051 20229	22Ω 5% 0,1W
3858	4822 051 20103	10k 5% 0,1W
3859	4822 052 10478	4Ω7 5% 0,33W
3860	4822 052 10228	2Ω2 5% 0,33W
3861	4822 051 20272	2k7 5% 0,1W
3862	4822 051 20272	2k7 5% 0,1W
3863	4822 051 20272	2k7 5% 0,1W
3864	4822 051 20122	1k2 5% 0,1W
3865	4822 051 20122	1k2 5% 0,1W
3866	4822 051 20122	1k2 5% 0,1W
3867	4822 051 20122	1k2 5% 0,1W
3868	4822 051 20242	2k4 5% 0,1W
3869	4822 051 20242	2k4 5% 0,1W
3870	4822 051 20122	1k2 5% 0,1W
3871	4822 051 20122	1k2 5% 0,1W
3872	4822 051 20223	22k 5% 0,1W
3873	4822 051 20223	22k 5% 0,1W
3874	4822 051 10102	1k 2% 0,25W
3875	4822 051 10102	1k 2% 0,25W
3876	4822 050 22203	22k 1% 0,6W
3877	4822 051 20472	4k7 5% 0,1W
3878	4822 051 20223	22k 5% 0,1W
3879	4822 050 21003	10k 1% 0,6W

3880	4822 051 10102	1k 2% 0,25W
3881	4822 050 21002	1k 1% 0,6W
3882	4822 051 20561	560Ω 5% 0,1W
3883	4822 051 10561	560Ω 2% 0,25W
3884	4822 051 20475	4M7 5% 0,1W
3885	4822 051 20475	4M7 5% 0,1W
3886	4822 052 10109	10Ω 5% 0,33W
3887	4822 052 10109	10Ω 5% 0,33W
3888	4822 050 22203	22k 5% 1/8W
3890	4822 051 20222	2k2 5% 0,1W
3891	4822 051 20222	2k2 5% 0,1W
3894	4822 051 10101	100Ω 2% 0,25W
3895	4822 051 20109	10Ω 5% 0,1W
3896	4822 052 10108	1Ω 5% 0,33W
3900	4822 052 10228	2Ω2 5% 0,33W
3902	4822 051 20224	220k 5% 0,1W
3903	5322 111 90473	10k 2% 0,2W NETWORK
3905	4822 051 20103	10k 5% 0,1W
3906	4822 051 20103	10k 5% 0,1W
3907	4822 050 21003	10k 1% 0,6W
3908	4822 051 20103	10k 5% 0,1W
3909	4822 051 20103	10k 5% 0,1W
3910	4822 116 52921	4k7 1% 0,6W
3911	4822 050 21002	1k 1% 0,6W
3916	4822 051 20103	10k 5% 0,1W
3918	4822 051 20471	470Ω 5% 0,1W
3919	4822 051 20471	470Ω 5% 0,1W
3921	4822 051 20472	4k7 5% 0,1W
3922	4822 051 20472	4k7 5% 0,1W
3923	4822 051 20103	10k 5% 0,1W
3924	4822 051 20222	2k2 5% 0,1W
3925	4822 051 20103	10k 5% 0,1W
3930	4822 116 52921	4k7 1% 0,6W
3931	4822 050 21203	12k 1% 0,6W
3932	4822 050 21203	12k 1% 0,6W
3933	4822 050 21203	12k 1% 0,6W
3934	4822 050 21203	12k 1% 0,6W
3935	4822 051 20229	22Ω 5% 0,1W
3936	4822 052 10228	2Ω2 5% 0,33W
3937	4822 052 10228	2Ω2 5% 0,33W
3938	4822 051 20103	10k 5% 0,1W
3940	4822 051 10102	1k 2% 0,25W
3941	4822 051 20153	15k 5% 0,1W
3942	4822 051 10102	1k 2% 0,25W
3943	4822 051 20103	10k 5% 0,1W
3944	4822 116 52224	470Ω 5% 0,5W
3960	4822 050 21003	10k 1% 0,6W
3961	4822 050 21003	10k 1% 0,6W
3962	4822 050 21003	10k 1% 0,6W
3963	4822 050 21003	10k 1% 0,6W
4803	4822 051 10008	jumper
4804	4822 051 10008	jumper
4805	4822 051 10008	jumper
4806	4822 051 10008	jumper
4807	4822 051 10008	jumper

5860	4822 157 60363	ANTI INTERFERENCE COIL

6680	5322 130 30684	1N4002
6681	5322 130 30684	1N4002
6682	4822 130 30621	1N4148
6683	5322 130 30684	1N4002
6684	4822 130 34174	BZX79-C4V7
6685	4822 130 34173	BZX79-C5V6
6686	4822 130 30621	1N4148
6750	4822 130 31456	BZV85-C5V1
6751	5322 130 30684	1N4002
6753	4822 130 31024	BZX79-C18
6760	5322 130 30684	1N4002
6761	5322 130 30684	1N4002
6770	5322 130 30684	1N4002
6771	5322 130 30684	1N4002
6802	4822 130 30621	1N4148
6840	5322 130 30684	1N4002
6841	5322 130 30684	1N4002
6842	4822 130 30621	1N4148
6843	4822 130 34174	BZX55-C4V7
7680	5322 130 42012	BC858
7681	4822 130 61207	BC848
7750	4822 209 80808	MC7815CT
7760	4822 209 71579	TY40408
7802	4822 209 73235	TDA8809T/C2
7805	4822 209 62112	M50423FP
7806	4822 209 70422	MN4264-15
7807	4822 209 73236	TDA1543/N2
7808	4822 209 83163	LM833N
7809	4822 209 83163	LM833N
7810	4822 130 61207	BC848
7811	5322 130 42012	BC858
7812	4822 130 61207	BC848
7813	4822 130 61207	BC848
7814	4822 130 42696	BC818-25
7815	4822 130 42696	BC818-25
7820	4822 209 63724	MC68HC05C9P/3961
7822	5322 130 42012	BC858
7823	4822 130 61207	BC848
7825	4822 209 72587	TCA0372DP2
7830	4822 130 61207	BC848
7831	4822 130 44104	BC328
7832	4822 130 61207	BC848
7840	4822 209 80797	LM393N
7870	4822 209 73233	MC79L05ACP
7971	4822 130 40938	BC548

PHOTO DIODE SIGNAL CONTROLLER PANEL

Miscellaneous

SK3	4822 276 12523	

2800	4822 122 33809	22nF 20% 50V
2801	5322 122 32268	470PF 10% 50V
2803	4822 122 33496	100nF 10% 63V
2806	4822 122 33496	100nF 10% 63V
2807	4822 122 33175	2,2nF 20% 50V
2808	4822 121 43526	47nF 5% 100V
2809	5322 122 32531	100pF 5% 50V
2810	4822 122 33177	10nF 20% 50V
2811	5322 122 34123	1nF 10% 50V
2812	4822 121 43375	220nF 5% 63V
2813	4822 121 51252	470nF 5% 63V
2815	4822 124 40272	33µF 20% 16V
2816	4822 122 32575	220pF 10% 500V
2817	4822 121 51252	470nF 5% 63V
2818	4822 122 33339	4,7nF 10% 50V
2819	5322 121 42661	330nF 5% 63V
2820	4822 122 33496	100nF 10% 63V
2830	5322 122 34123	1nF 10% 50V
2831	4822 122 33496	100nF 10% 63V
2832	4822 124 41583	0,68µF 20% 50V Bipolar
2833	4822 122 33496	100nF 10% 63V
2834	4822 122 33496	100nF 10% 63V

3800	4822 116 52921	4k7 1% 0,6W
3801	4822 051 20104	100k 5% 0,1W
3804	4822 051 20123	12k 5% 0,1W
3805	4822 051 20101	100Ω 5% 0,1W
3806	4822 051 10102	1k 2% 0,25W
3807	4822 051 20243	24k 5% 0,1W
3808	4822 051 20562	5k6 5% 0,1W
3810	4822 051 20101	100Ω 5% 0,1W
3811	4822 052 10189	18Ω 5% 0,33W
3812	4822 052 10129	12Ω 5% 0,33W
3813	4822 050 22202	2k2 1% 0,6W
3814	4822 050 22201	220Ω 1% 0,6W
3815	4822 051 20113	11k 5% 0,1W
3816	4822 051 20124	120k 5% 0,1W
3817	4822 051 20154	150k 5% 0,1W
3818	4822 051 20563	56k 5% 0,1W
3819	4822 051 20164	160k 5% 0,1W
3820	4822 116 52866	82k 1% 0,6W
3821	4822 052 10279	27Ω 5% 0,33W
3822	4822 052 10229	22Ω 5% 0,33W
3823	4822 100 11193	22k 20% LIN 0,05W
3824	4822 050 24704	470k 1% 0,6W
3835	4822 050 26802	6k8 1% 0,6W
3836	4822 052 10478	4Ω7 5% 0,33W
3837	4822 051 20339	33Ω 5% 0,1W
3838	4822 050 26802	6k8 1% 0,6W
3839	4822 071 17501	pico fuse 750mA
3840	4822 071 17501	pico fuse 750mA
3893	4822 101 10685	4k7 20% LIN 0.05W
4811	4822 051 10008	jumper
4812	4822 051 10008	jumper
4813	4822 051 10008	jumper

6800	4822 130 30861	BZX79-C7V5
6801	4822 130 30861	BZX79-C7V5
6850	4822 130 30621	1N4148
7800	4822 209 73234	TDA8808T/C3
7801	4822 130 44121	BC338
7803	4822 209 72587	TCA0372DP2

DISPLAY PANEL

Miscelllaneous

	4822 256 91764	DISPLAY HOLDER
1989	4822 130 90964	DISPLAY

2970	4822 122 10158	1nF 10% 50V
2971	5322 124 21749	10µF 20% 63V
2972	5322 124 21643	22µF 20% 40V
2973	5322 124 21749	10µF 20% 63V

3970	4822 052 10478	4Ω7 5% 0,33W
3971	4822 051 10182	1k8 5% 1/8W
3972	4822 051 10182	1k8 5% 1/8W
3973	4822 116 52921	4k7 1% 0,6W
3974	4822 116 52921	4k7 1% 0,6W
3975	4822 050 24703	47k 1% 0,6W
3976	4822 050 21504	150k 1% 0,6W
3977	4822 116 52921	4k7 1% 0,6W
3979	4822 050 22203	22k 1% 0,6W
3980	4822 050 22203	22k 1% 0,6W
3984	4822 116 52224	470Ω 5% 0,5W
3985	4822 052 10108	1Ω 5% 0,33W
3986	4822 052 10108	1Ω 5% 0,33W
3987	4822 116 52224	470Ω 5% 0,5W

6891	4822 130 30621	1N4148
6970	4822 130 30621	1N4148
6971	4822 130 34281	BZX79-C15
6972	4822 130 34233	BZX79-C5V1
6973	4822 130 34233	BZX79-C5V1
7970	4822 209 72226	U3090

KEYBOARD PANEL

1970	4822 276 12465	TACT SWITCH
....	....	
1986	4822 276 12465	TACT SWITCH
1990	4822 267 50721	SOCKET 9-FOLD
1991	4822 267 40624	SOCKET 5-FOLD
1992	4822 267 40624	SOCKET 5-FOLD

MISCELLANEOUS

	4822 321 61026	16P FLEX
	4822 321 61222	7P FLEX
	4822 256 30274	FUSE HOLDER
1501	4822 070 31001	FUSE 100 mA
5500	4822 146 30859	MAINS TRAFO